Allocating device

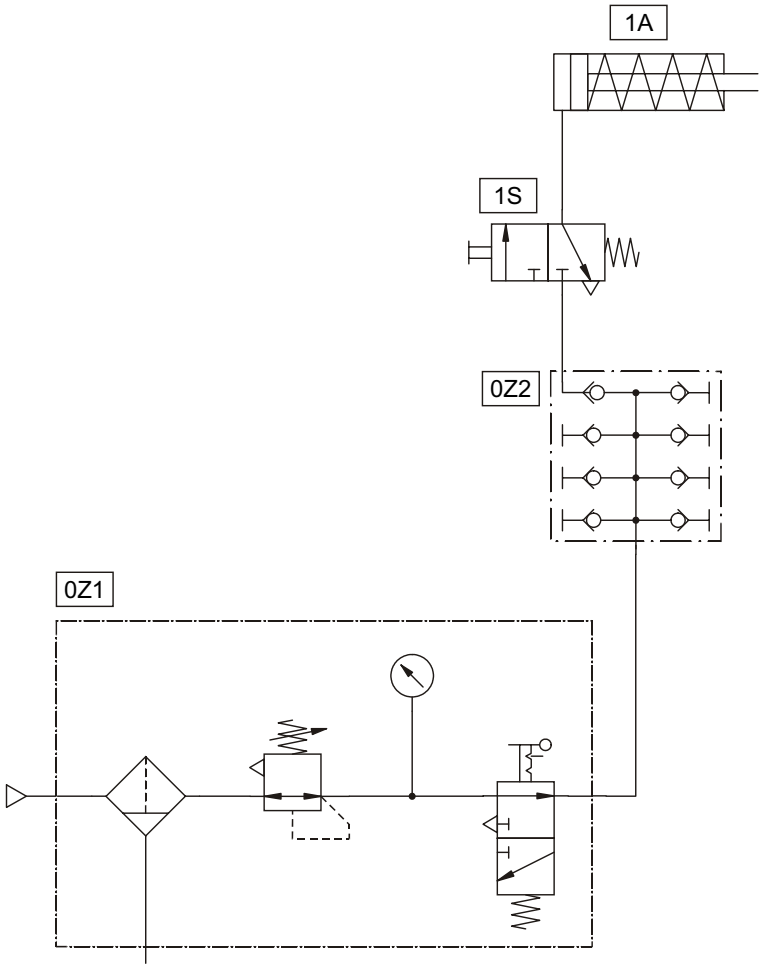

Detailed representation of service unit with on-off valve

Fig. 1/2a: Circuit diagram

Fig. 1/2b: Circuit diagram

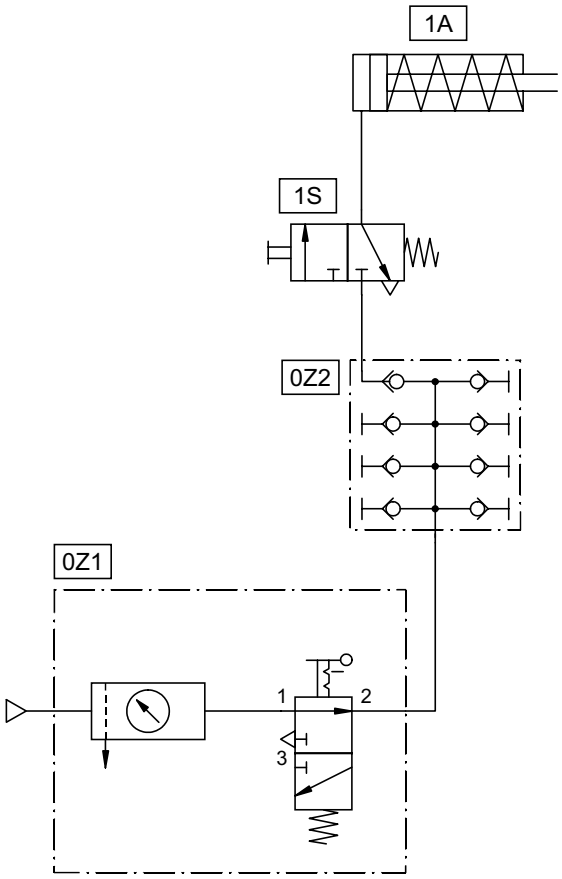

Simplified representation of service unit with on-off valve

Fig. 1/3: Displacement-step diagram

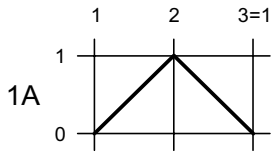

Simplified representation without signal lines[1]

1 Displacement-step diagram
From exercise 6 on, all diagrams are shown complete with signal lines.

Solution description

The description of the solution makes reference to the circuit diagram and the displacement-step diagram. With regard to the circuit diagram, we distinguish between the detailed representation and the simplified representation.

Service unit with on-off valve and manifold

Component (0Z2) represents the manifold (8 connections) (see also circuit design). Component (0Z1) symbolises the service unit and on-off valve.

Initial position (first vertical line in the motion diagram)

The initial position[2] of the cylinder and valves can be ascertained from the circuit diagram. The internal spring of cylinder (1A) holds the piston in the retracted end position. The volume of air in the cylinder is evacuated via the 3/2-way valve (1S).

Step 1-2

Through operating the 3/2-way valve (1S) via the push button, air is applied to the chamber on the piston rod side of cylinder (1A). The piston rod of the cylinder advances, and pushes a valve blank out of the magazine. If valve (1S) continues to be operated, the piston rod remains in the forward end position.

Step 2-3

After releasing the valve actuating button, the air in the cylinder is exhausted via the 3/2-way valve (1S). The force of the return spring pushes the piston back to its initial position. The valve blanks are supplied from the magazine by gravity.

Marginal condition

If the push button (1S) is briefly pressed, piston rod (1A) advances only part of the way and returns immediately.

---

2 Initial position
The components assume the specified states required to start the sequence of operations, i.e. the on-off valve (0Z1) is switched on and the system pressurised. If the start button (1S.) is pressed, the piston rod of the cylinder (1A) advances.

Fig. 1/4: Circuit design

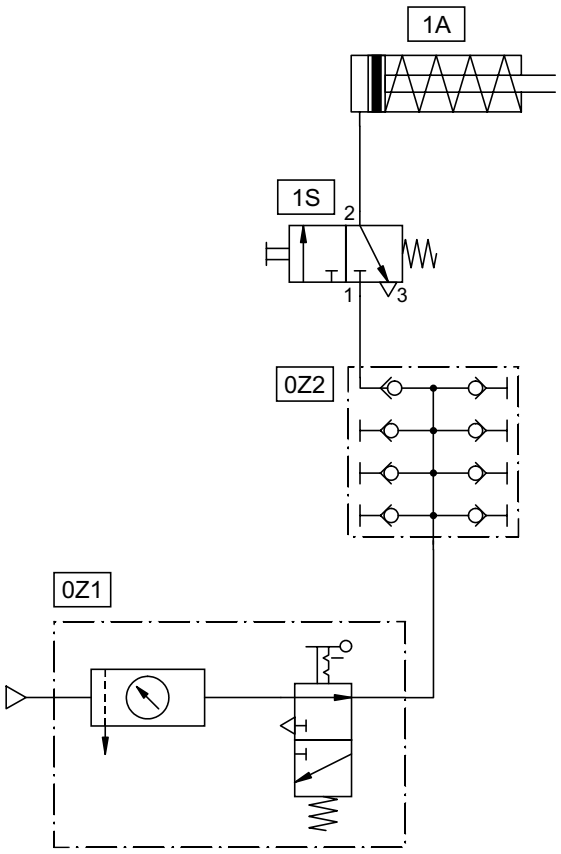

Components list

Components	*Description*
0Z1	Service unit with on-off valve
0Z2	Manifold
1A	Single-acting cylinder
1S	3/2-way valve with push button, normally closed

Apart from the above mentioned components, you will need the Festo Didactic profile plate on which to build the systems, as well as a source of compressed air.

Follow up

- Switch off the compressed air supply by means of the 3/2-way on-off valve (0Z1). Exchange the connections on the 3/2-way push button valve (1S).
- Re-check the operation of the control system after switching on the compressed air.

Sorting device for metal stampings

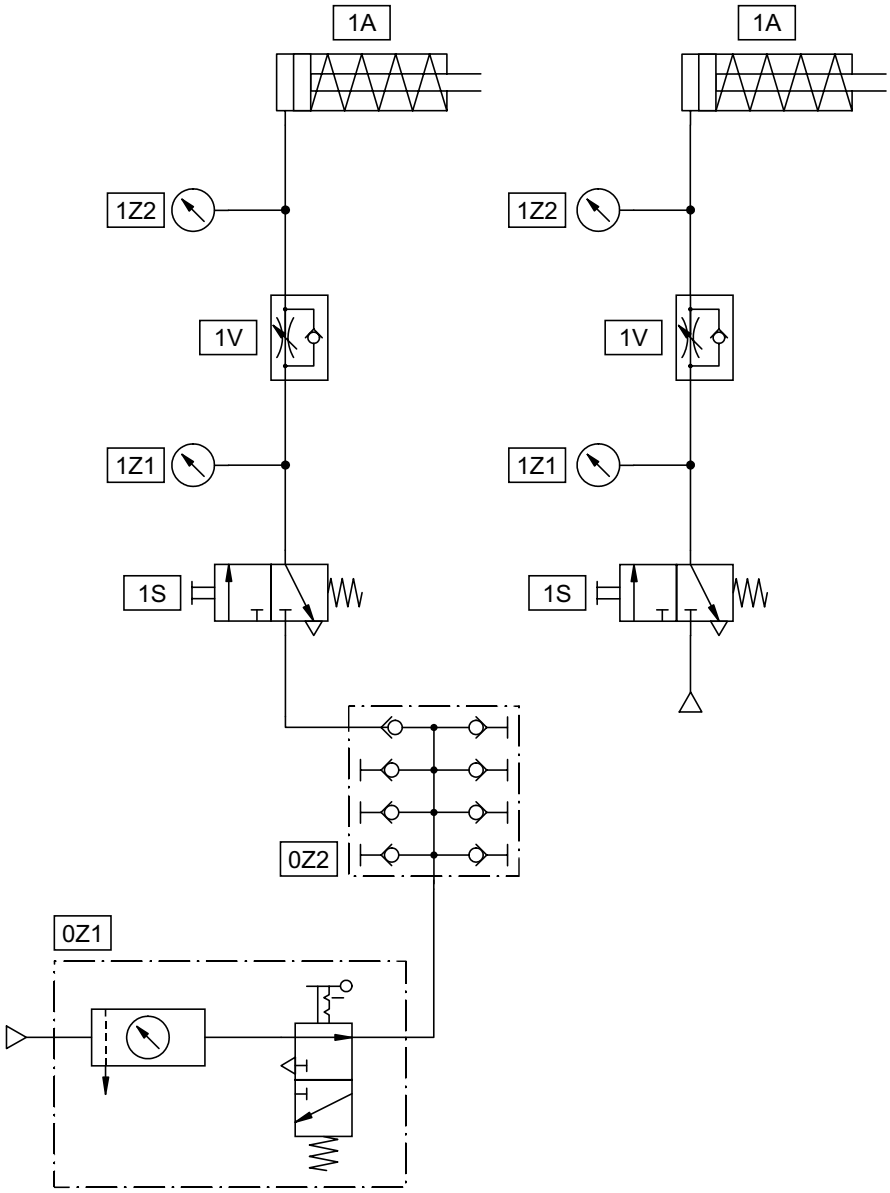

a) Simplified representation of service unit with on-off valve

b) Representation without service unit with on-off valve and manifold

Fig. 2/2: Circuit diagram

Fig. 2/3: Displacement-step diagram

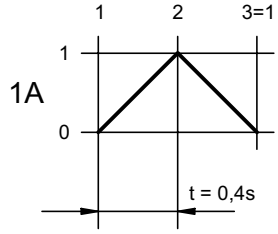

Simplified representation without signal lines

Solution description

In the circuit diagram, a distinction is made between the simplified representation of the service unit with on-off valve and the version without service unit and on-off valve and manifold, (see also circuit diagram of exercise 1). The circuit diagrams of exercises 3 to 20 are shown without these components.

Initial position

In the initial position, the piston assumes the retracted end position. The volume of air inside the cylinder (1A) is evacuated via the 3/2-way push button valve (1S).

Step 1-2

By actuating the 3/2-way valve (1S), the chamber on the piston rod side of cylinder (1A) is pressurised via the one-way flow control valve (1V). The single-acting cylinder advances to its forward end position. The duration of the forward motion is set by means of the one-way flow control valve (stop watch). The flow control setting can be secured by means of the lock nut. The pressure gauge (1Z1) indicates the operating pressure during the forward motion and when the cylinder comes to rest in the advanced position. On the other hand, gauge (1Z2) shows pressure build-up during the advance. Furthermore, after completion of the forward motion, the pressure continues to rise until the operating pressure has been reached. If the push button valve (1S) continues to be actuated, the cylinder remains in the forward end position.

Step 2-3

After releasing the valve actuator (1S), the air in the cylinder is exhausted via the one-way flow control valve (1V) and the 3/2-way valve (1S). The cylinder returns to the retracted end position.

Marginal condition

If the push button of the 3/2-way valve (1S) is briefly pressed, the cylinder advances only part of the way and returns immediately.

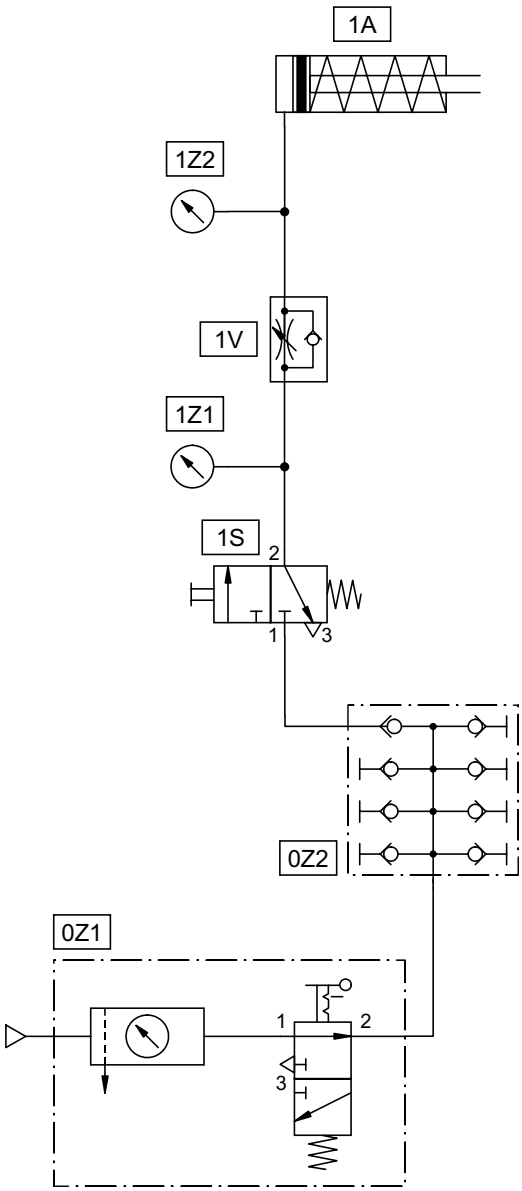

Fig. 2/4: Circuit design

Components list

Components	*Description*
0Z1	Service unit with on-off valve
0Z2	Manifold
1A	Single-acting cylinder
1S	3/2-way valve with push button, normally closed
1V	One-way flow control valve
1Z1	Pressure gauge
1Z2	Pressure gauge

Follow up

- Reverse the connections of the one-way flow control valve (1V). Observe the changed behaviour of the control system.
- With single-acting cylinders, one distinguishes between supply air flow control (forward stroke) and exhaust air control (return stroke)
- Exercise 9 gives an example of actuating a single-acting cylinder with supply and exhaust air control.

Separating parcel post

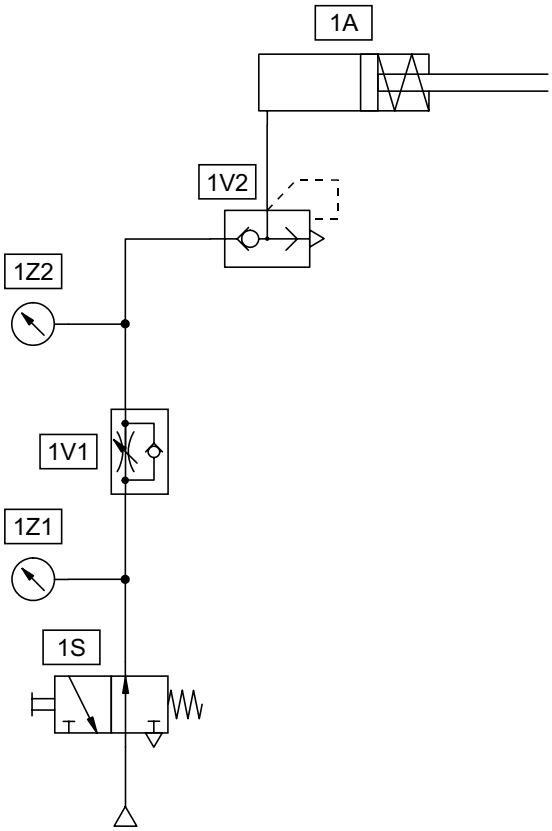

Fig. 3/2: Circuit diagram

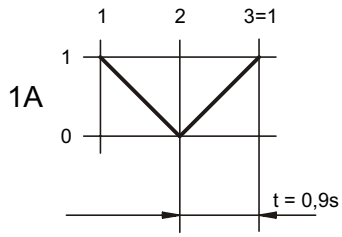

Simplified representation without signal lines

Fig. 3/3: Displacement-step diagram

Solution description

Normal position [3]

The installation is not pressurised. The piston rod of cylinder (1A) assumes the retracted end position through the action of the return spring.

Initial position

In the initial position, the single-acting cylinder is advanced. The piston chamber is pressurised via the 3/2-way, normally open, push button valve (1S).

Step 1-2

By actuating the 3/2-way push button valve (1S), the volume of air in cylinder (1A) is exhausted via the quick exhaust valve (1V2). The cylinder returns rapidly. If the push button (1S) continues to be actuated, the piston rod remains in the retracted end position. The next parcel slides into the parcel tray.

Step 2-3

If the valve actuator is then released, the piston rod advances and lifts the parcel. The desired time of advance t = 0.9 seconds is set by means of the one-way flow control valve (1V1) (stop watch).

Marginal condition

If the push button is pressed briefly, the cylinder retracts only part of the way.

---

3 Normal position
The term “normal position” applies to the state in which moving parts are unactuated and assume a certain position, for instance through spring force.

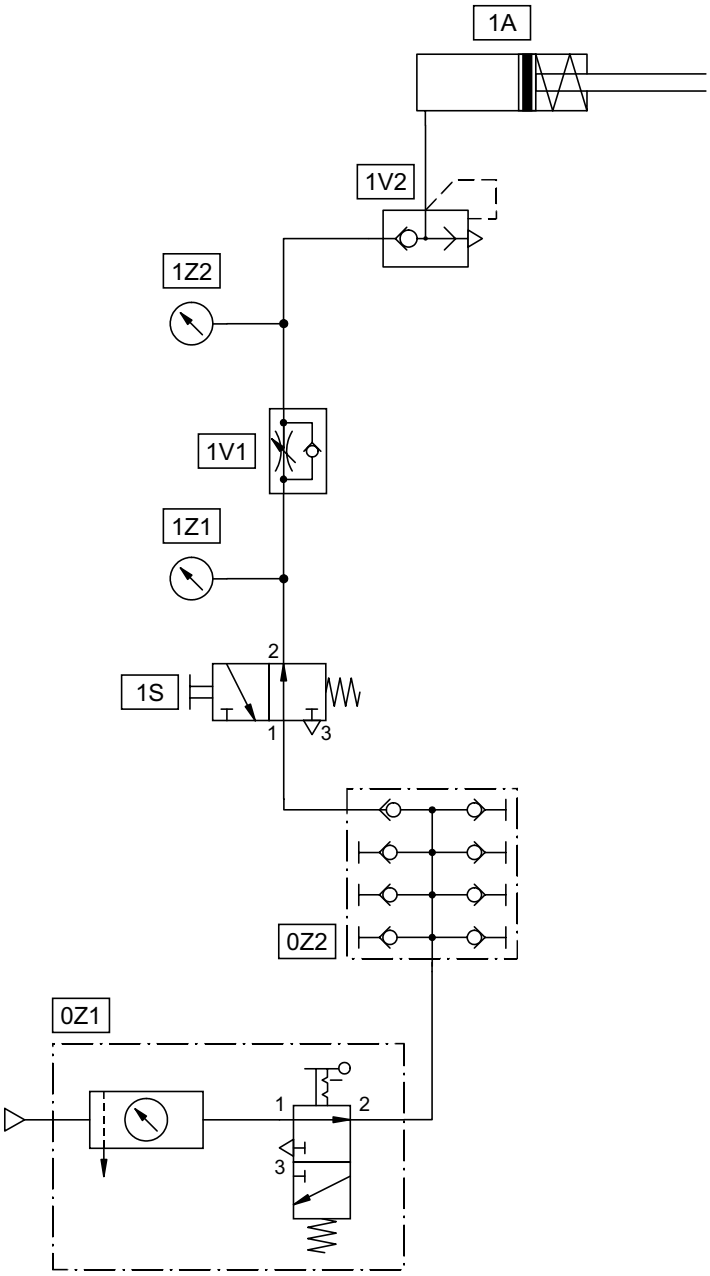

Fig. 3/4: Circuit design

The piece of tubing between the cylinder (1A) and the quick exhaust valve should be kept as short as possible. The shorter the piece of tubing, the more rapidly the piston rod will retract.

Solution 3

Components list

Components	Description
0Z1	Service unit with on-off valve
0Z2	Manifold
1A	Single-acting cylinder
1S	3/2-way valve with push button, normally open
1V1	One-way flow control valve
1V2	Quick exhaust valve
1Z1	Pressure gauge
1Z1	Pressure gauge

Vertical switching point for briquettes

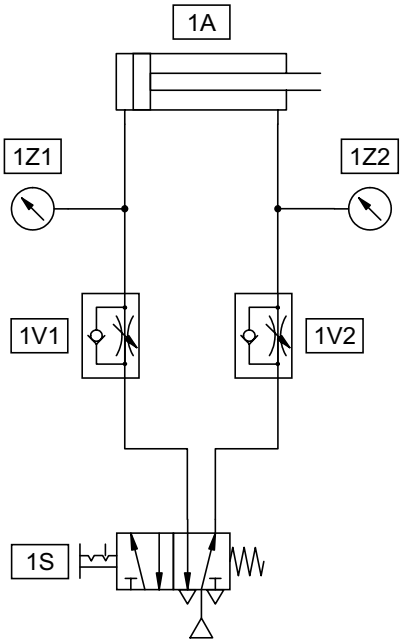

Fig. 4/2: Circuit diagram

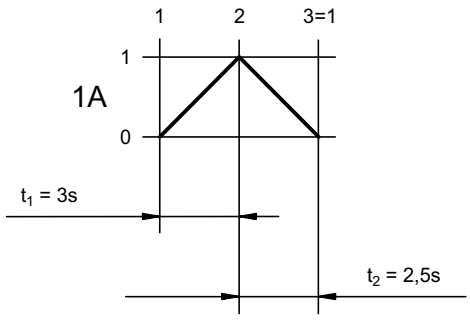

Simplified representation without signal lines

Fig. 4/3: Displacement-step diagram

Solution description

Initial position

In the initial position, the chamber on the piston rod side of the cylinder is supplied with air via 5/2-way valve (1S). The opposite side of the piston being exhausted. The cylinder is in the retracted end position. The pressure gauge (1Z2) indicates the operating pressure.

Step 1-2

If the selector switch of the 5/2-way valve (1S) with spring return is reversed, the cylinder (1A) travels slowly forward and remains in the advanced end position. The speed of advance is determined by the one-way flow control valve (1V2) on the piston rod side of the cylinder. The piston is held between two air cushions so that even very slow strokes are possible (exhaust air control). Observe the two pressure gauges (1Z1) and (1Z2).

Step 2-3

The selector switch (1S) is again reversed, which causes the cylinder to retract. The return stroke speed is determined by the one-way flow control valve (1V1).

Marginal condition

Reversing the selector switch (1S) during the forward or return stroke brings about immediate reversal of motion.

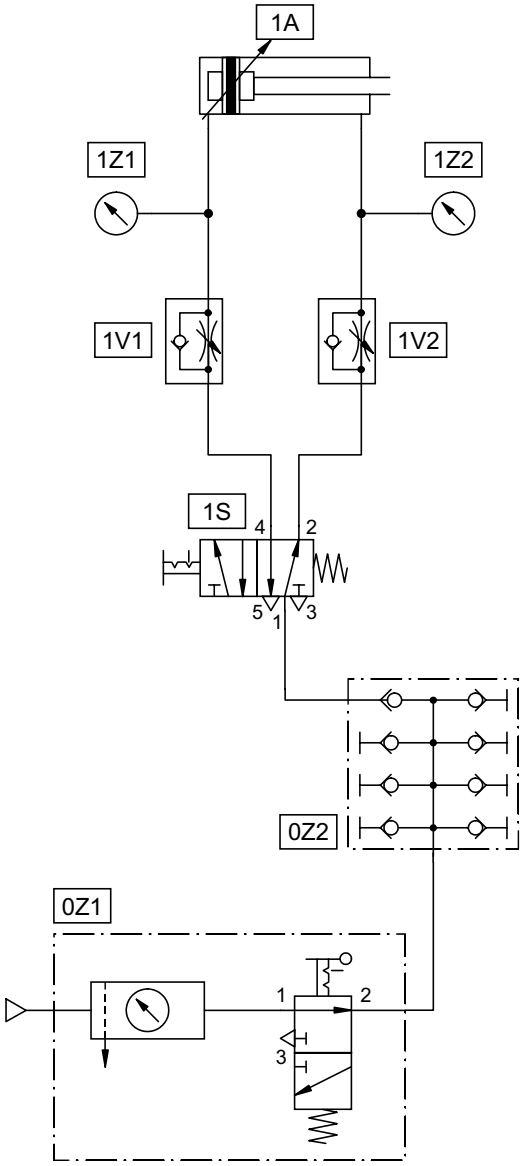

Fig. 4/4: Circuit design

Components list

Components	*Description*
0Z1	Service unit with on-off valve
0Z2	Manifold
1A	Double-acting cylinder
1Z1	Pressure gauge
1Z2	Pressure gauge
1V1	One-way flow control valve
1V2	One-way flow control valve
1S	5/2-way valve with selector switch

Follow up

- Reverse the connections of the two one-way flow control valves.. Observe the changed behaviour of the control system.
- Replace the double-acting cylinder (1A) with a single-acting cylinder. Connect the cylinder to output 4(A) of the power valve. The output 2(B) of the 5/2-way valve (1S) with spring return and selector switch is closed. (Connect a T-piece (quick push-pull connector) to the valve via a short piece of tubing. Connect the remaining two outputs of the T-piece with another short piece of tubing).
- Now interchange output 4(A) with 2(B). Observe the behaviour of the control system.

Fig 4/5: 5/2-way valve

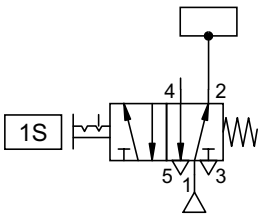

Edge folding device

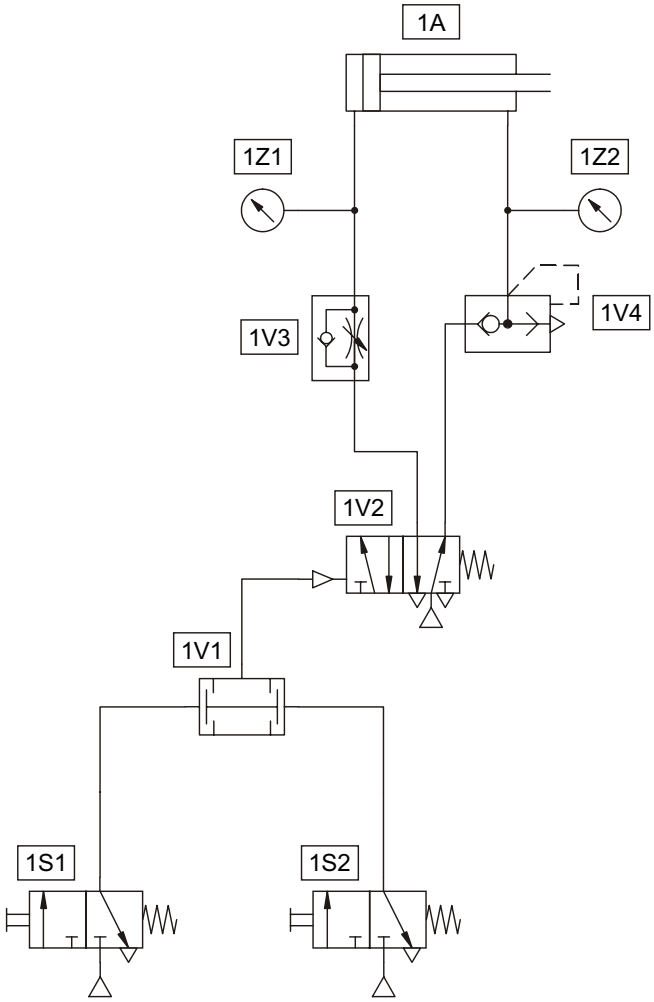

Fig. 5/2: Circuit diagram

The valve combination (1S1), (1S2) and (1V1) does not constitute a safety start-up function. It must not be put into practical use in this manner, the circuit must be assembled around a two-hand safety start unit.

Fig.5/3: Displacement-step diagram

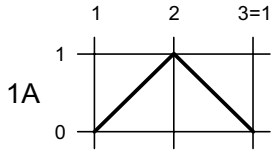

Simplified representation without signal lines

Solution description

Initial position

In the initial position, the piston rod of cylinder (1A) assumes the retracted end position. The power valve (1V2) is in the left hand switching position.

Step 1-2

If both 3/2-way valves (1S1) and (1S2) are actuated, pressure is applied at the output of the dual-pressure valve (1V1). The 5/2-way valve (1V2) reverses. The piston chamber of cylinder (1A) is supplied with unrestricted compressed air via the one-way flow control valve (1V3). The cylinder travels to its forward end position. As the chamber on the piston rod side is rapidly exhausted through the quick exhaust valve (1V4), the cylinder motion is very fast. If both 3/2-way valves (1S1) and (1S2) remain actuated, the cylinder remains in the forward end position.

Step 2-3

If at least one of the two push buttons (1S1) or (1S2) is released, power valve (1V2) is no longer pressurised. The valve reverses through the spring. The actuator travels to its initial position under conditions of flow restriction (1V3).

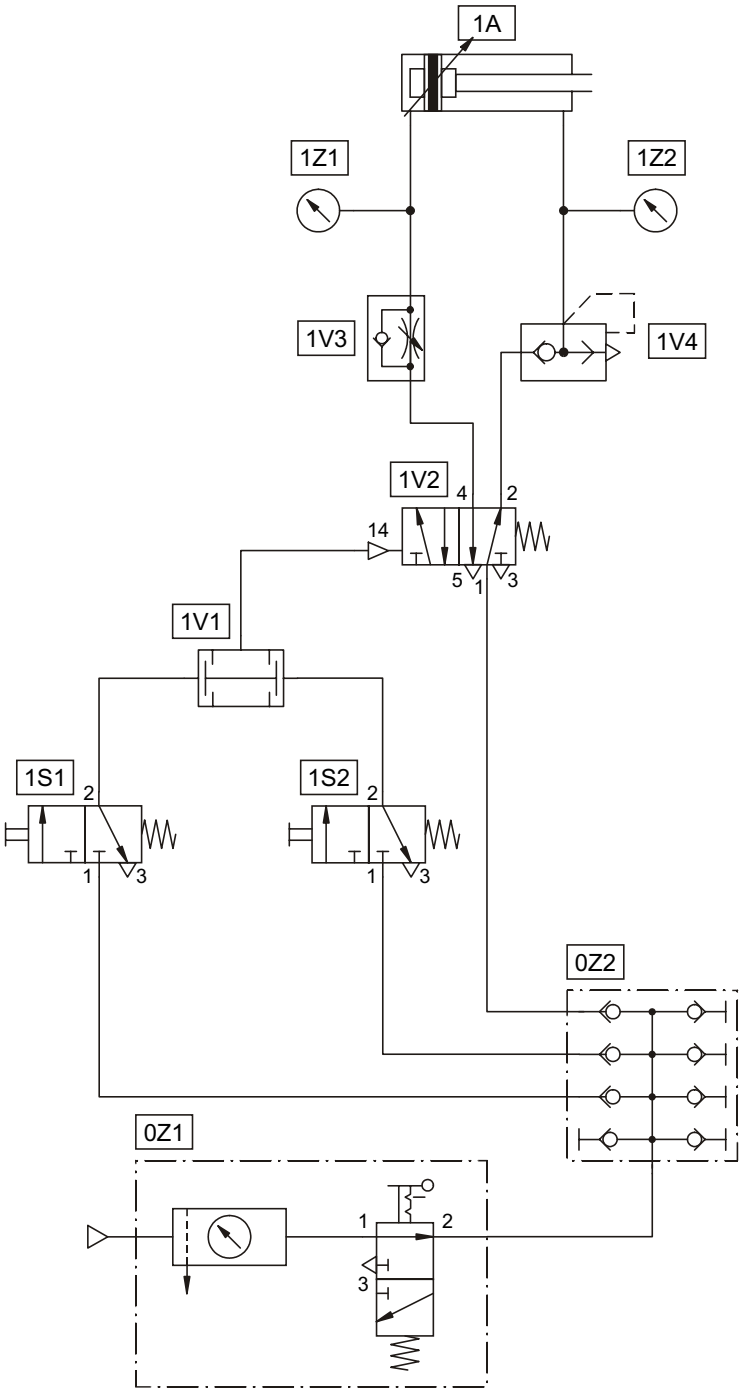

Fig. 5/4: Circuit design

Components list

Components	*Description*
0Z1	Service unit with on-off valve
0Z2	Manifold
1A	Double-acting cylinder
1S1	3/2-way valve with push button, normally closed
1S2	3/2-way valve with push button, normally closed
1V1	Dual pressure valve
1V2	5/2-way single pilot valve
1V3	One-way flow control valve
1V4	Quick exhaust valve
1Z1	Pressure gauge
1Z2	Pressure gauge

Follow up

Device technology offers two ways of putting the logical AND function into practice.

- Remove the dual-pressure valve (1V1) from the control circuit and connect both 3/2-way valves (1S1) and (1S2) in series (input 1S1-1 to compressed air; output 1S1-2 to be piped to input 1S2-1; connect output 1S2-2 with input 1V2-14.)

Marking machine

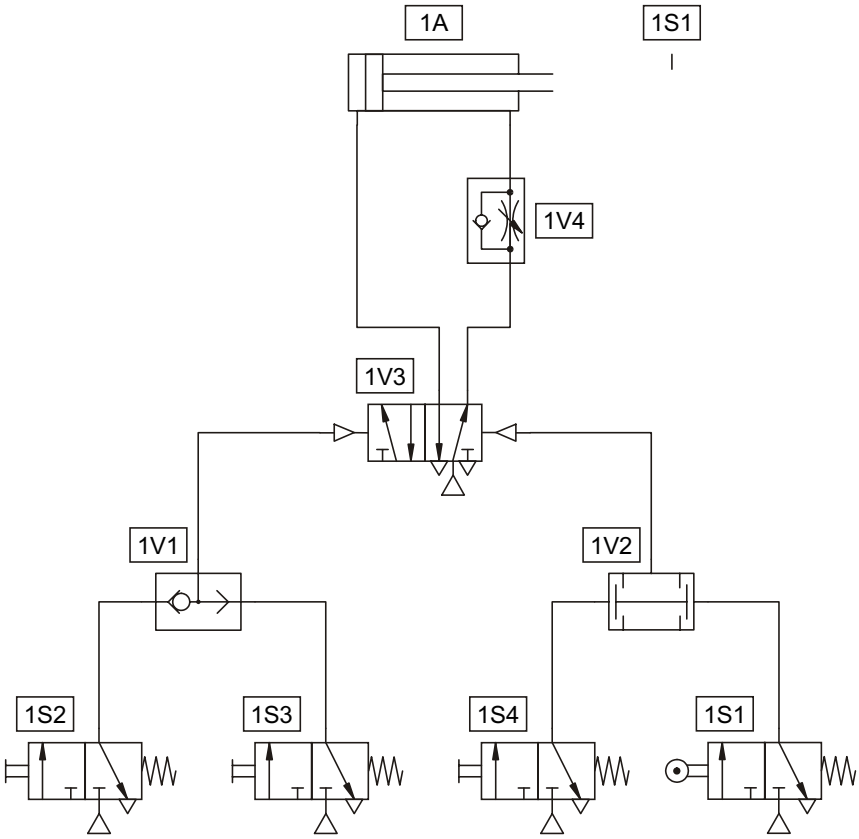

Fig. 6/2: Circuit diagram

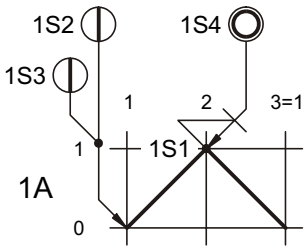

Fig. 6/3: Displacement-step diagram

Solution description

Initial position

In the initial position, the piston rod of cylinder (1A) assumes the retracted end position. The pilot-operated 5/2-way bi-stable valve (1V1) with memory supplies air to the piston rod chamber and exhausts the chamber on the inlet side of the piston.

Step 1-2

If at least one of the two 3/2-way push button valves (1S2) and (1S3) is actuated, memory valve (1V3) reverses and the piston rod advances slowly with throttled exhaust air (1V4) – with this the surveyor's measring rod is pushed forward. In the forward end position, the piston rod actuates the roller lever valve (1S1) by means of the trip cam. If no push button has been actuated, the cylinder remains in the forward end position.

Step 2-3

After pressing the push button of the directly actuated 3/2-way valve (1S3) for the return stroke, memory valve (1V3) reverses – the piston rod is rapidly retracted.

Marginal condition

The commencement of the return stroke through push button (1S4) can be initiated only when the forward end position has been reached and roller lever valve (1S1) thus actuated. If a counter signal is present at 5/2-way valve (1V3), the return stroke cannot be initiated.

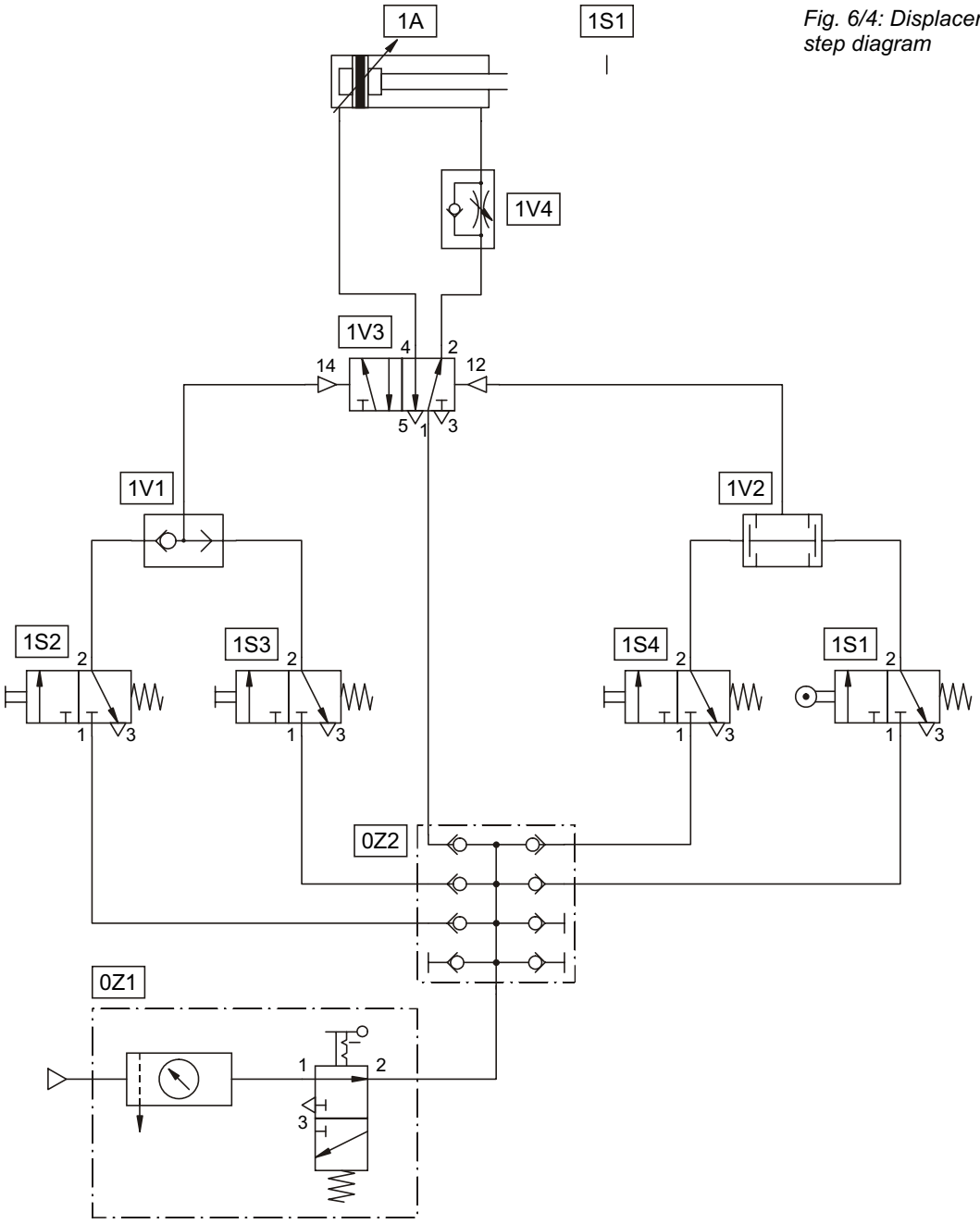

Fig. 6/4: Displacement-step diagram

Solution 6

Components list

Components	Description
0Z1	Service unit with on-off valve
0Z2	Manifold
1A	Double-acting cylinder
1S1	3/2-way roller lever valve, normally closed
1S2	3/2-way valve with push button, normally closed
1S3	3/2-way valve with push button, normally closed
1S4	3/2-way valve with push button, normally closed
1V1	Shuttle valve
1V2	Dual-pressure valve
1V3	5/2-way double pilot valve
1V4	One-way flow control valve

Separating out plain pins

Fig. 7/2: Circuit diagram

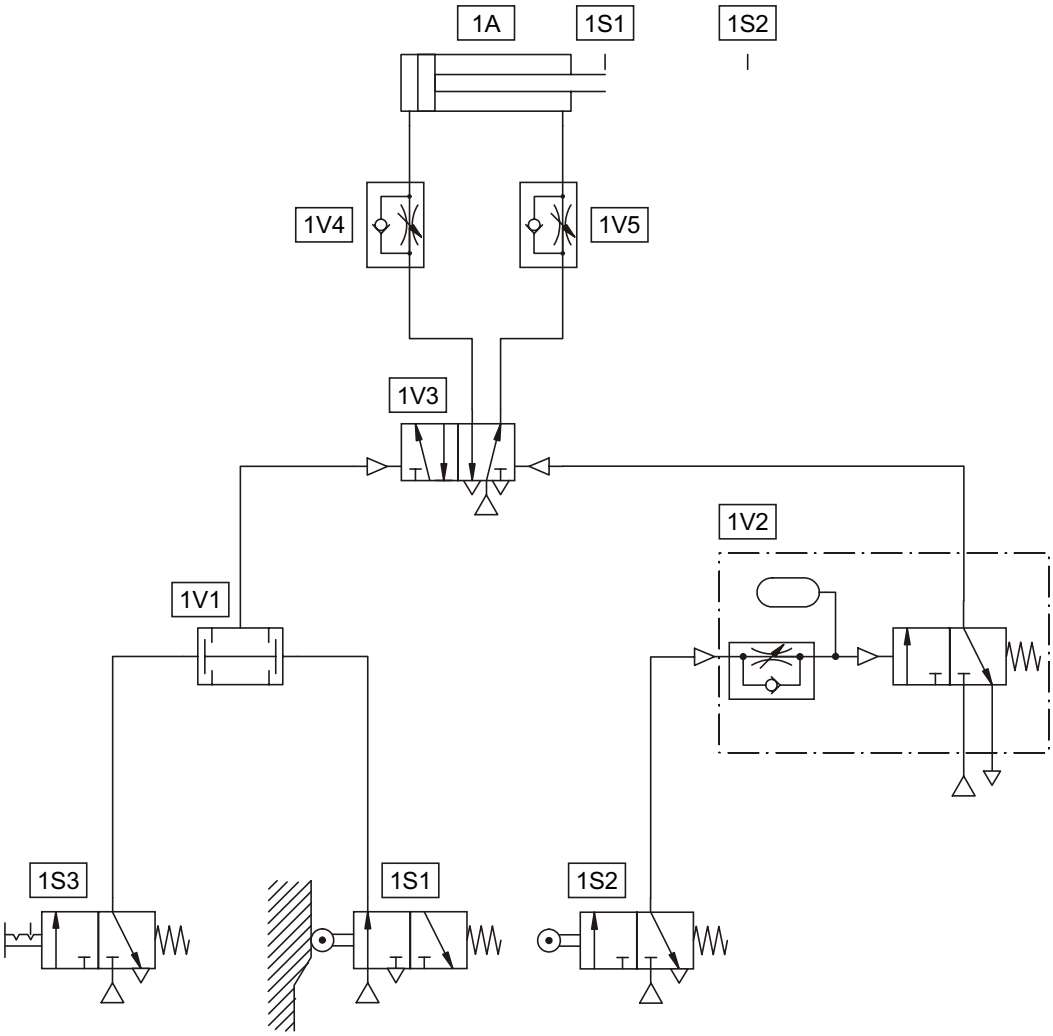

Fig. 7/3: Displacement-step diagram

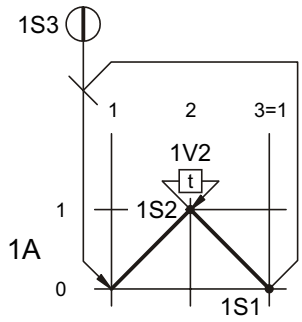

Solution description

Initial position

In the initial position the piston rod of the cylinder (1A) assumes the retracted position. The trip cam actuates the roller lever valve (1S1). One of the two start conditions is fulfilled.

Step 1-2

If the detented valve (1S3) is actuated, the second condition of the dual-pressure valve (1V1) is fulfilled, and the final control element (1V3) is switched through. The piston rod extends with exhaust air throttled (1V5). The duration of the advance stroke is t_1 = 0.6 seconds. In the forward end position, the trip cam actuates the roller lever valve (1S2). The time delay valve (1V2) is pressurised. The reservoir is filled via the restrictor. After the set time of t_2 = 1.0 seconds, the 3/2-way valve of the time delay valve is switched. A one signal is present at the output port. The final control element (1V3) returns to its initial position.

Step 2-3

Reversing of the memory valve (1V3) causes the piston rod to retract with exhaust air throttled. The duration of the return stroke of t_3 = 0.4 seconds is set by means of the one-way flow control valve (1V4). When the roller lever valve (1S1) is re-actuated, the return stroke is carried out.

Continuous cycle

If the start valve (1S3) is depressed and remains in the actuated position, the piston rod carries out a continuous to and fro movement. Only when the detent (1S3) is returned to its initial position, is the motion sequence concluded at the end of the cycle.

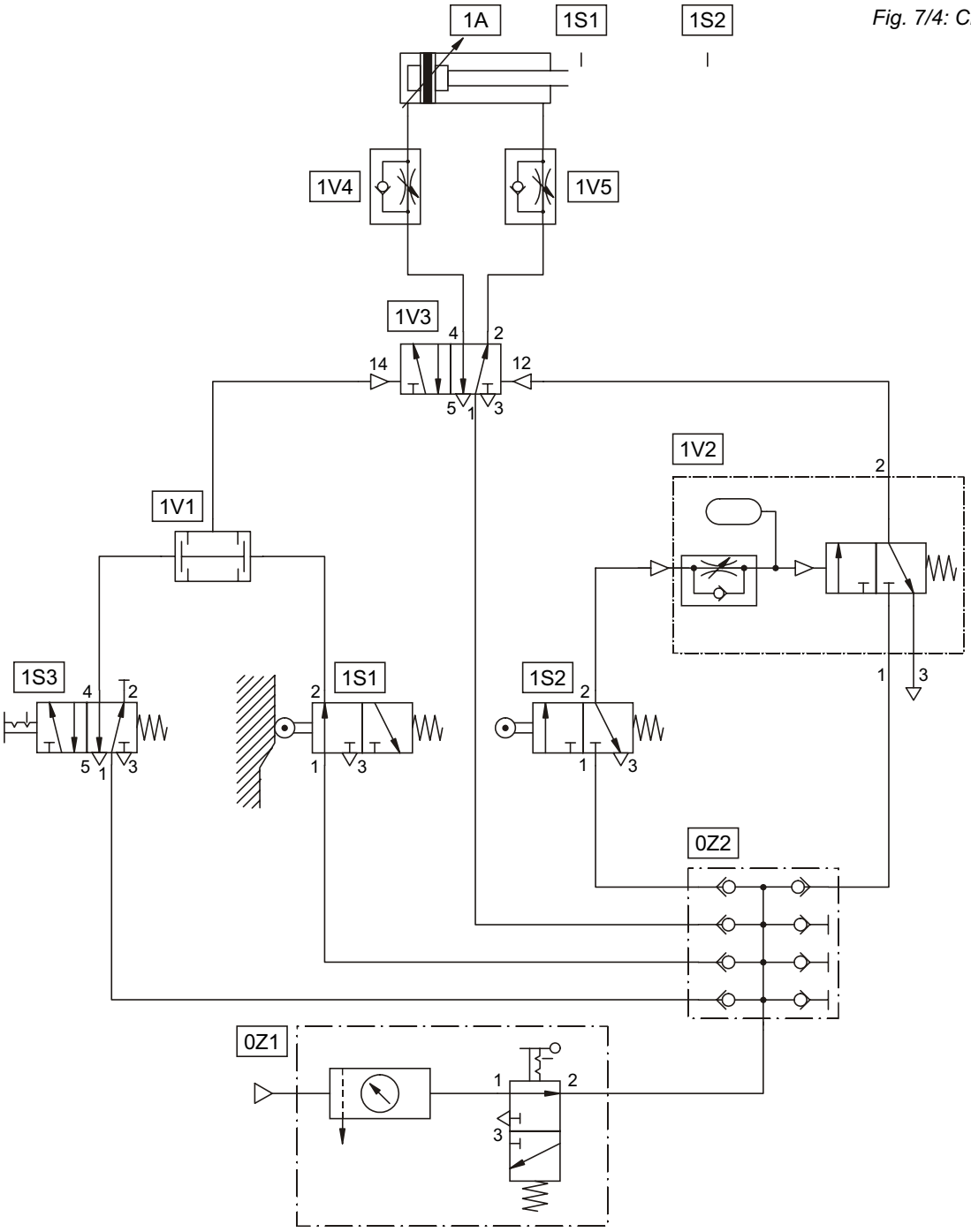

Fig. 7/4: Circuit design

Output 2(B) of the 5/2-way valve (1S3) with selector switch is closed. Fit a T-Connector (quick push-pull connector) on to the valve using a short piece of tubing. Interconnect the remaining two outputs of the T-connector with another short piece of tubing.

Fig. 7/5: 5/2-way valve

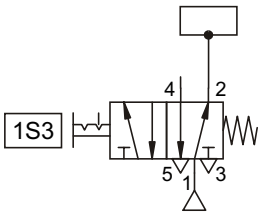

Components list

Components	*Description*
0Z1	Service unit with on-off valve
0Z2	Manifold
1A	Double-acting cylinder
1S1	3/2-way roller lever valve, normally closed
1S2	3/2-way roller lever valve, normally closed
1S3	5/2-way valve with selector switch
1V1	Dual-pressure valve
1V2	Time delay valve, normally closed
1V3	5/2-way double pilot valve
1V4	One-way flow control valve
1V5	One-way flow control valve

Follow up

- Mount the pressure sequence valve in the control in place of the time delay valve. Observe the behaviour of the control with a variety of settings.

The operating pressure for the service unit is set to p =6 bar (= 600 kPa).

- Lower the operating pressure in stages of p =1 bar (= 100 kPa). Determine the change in cycle time in relation to the operating pressure (stop watch).

Foil welding druml

Fig. 8/2: Circuit diagram

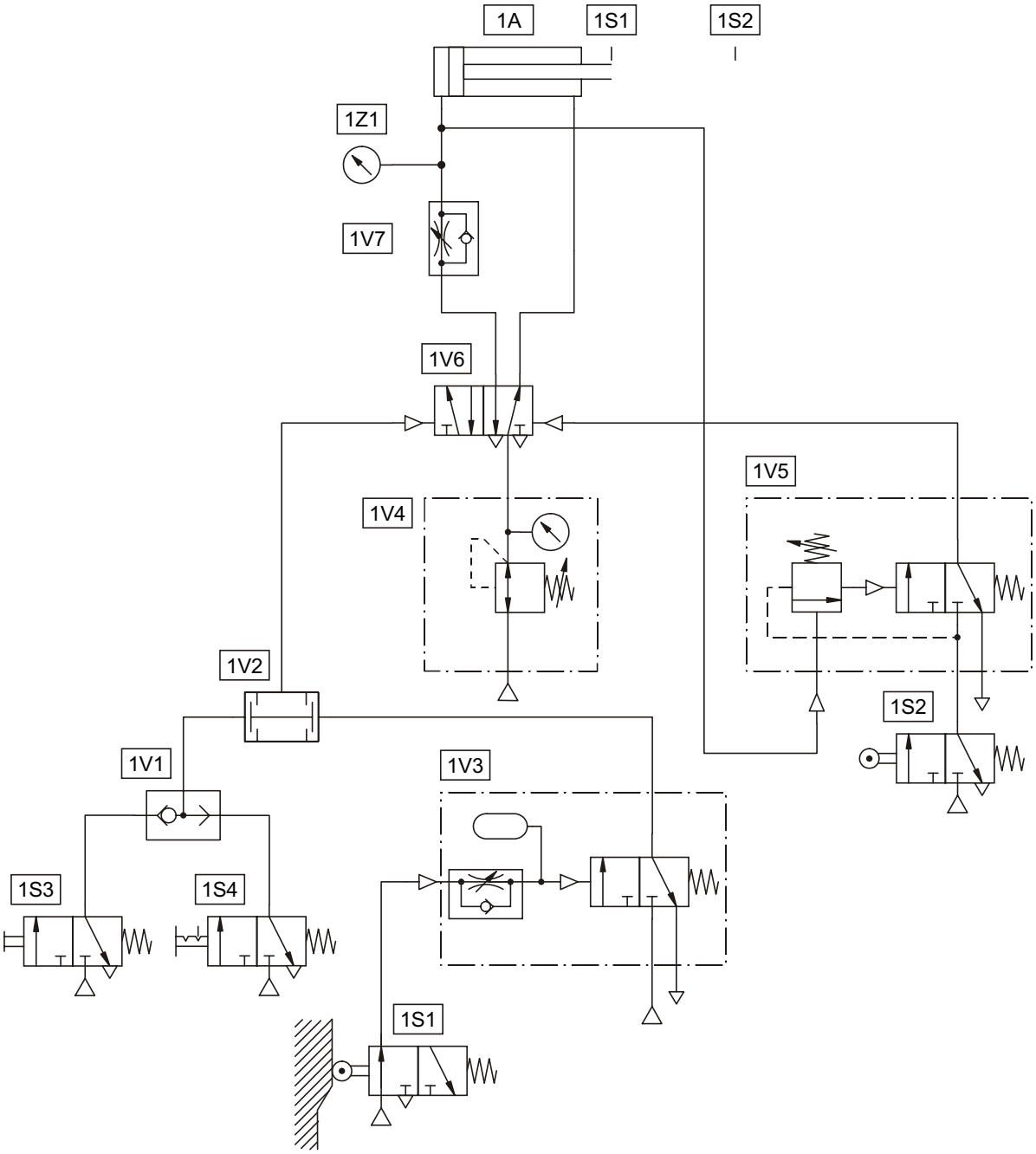

The 3/2-way valve of the time delay valve (1V3) is actuated in the initial position.

Fig. 8/3: Displacement-step diagram

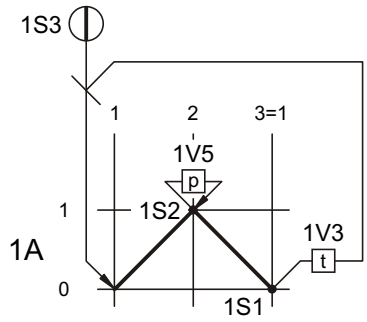

Solution description

Initial position

In the initial position, the cylinder assumes the retracted end position. The final control valve (1V6) supplies pressure to the chamber on the piston rod side of the cylinder. The roller lever valve (1S1) is depressed and the time delay valve (1V3) is actuated. A one-signal is present at the right-hand input of the dual-pressure valve (1V2).

Step 1-2

If the push button (1S3) is actuated, the shuttle valve (1V1) passes on a signal to the dual-pressure valve (1V2). This causes the reversal of the final control element (1V6). The cylinder extends slowly with supply air throttled (1V7). The pressure regulator (1V4) limits the pressure to a maximum of p = 4 bar (= 400 kPa). (The drum cannot be damaged by the rail). In the forward end position, the trip cam of the cylinder actuates the roller lever valve (1S2). This causes pressure to be applied to the pressure sequence valve (1V5) at input 1. The pressure sequence valve is actuated when a pressure of p = 3 bar (= 300 kPa) has been reached in the piston chamber. Adjust the flow control (1V7) so that the slow increase in pressure causes the cylinder to pause (t_1 = 3 seconds) in the forward end position.

Step 2-3

Once the pressure sequence valve 1V5) has been switched, the final control element (1V6) is reversed. The cylinder travels to its initial start position. Re-actuation of the roller lever valve (1S1) causes power to be supplied to the pilot port of the time delay valve. Once the specified time of t_2 = 2 seconds has elapsed, the dual-pressure valve (1V2) is supplied with air to the right of the time delay valve (1V3) so that a renewed start is possible.

Continuous cycle

If the selector switch of the valve (1S4) is reversed, the control is switched to continuous cycle. Returning the detent to its initial position causes the control to stop at the end of the cycle.

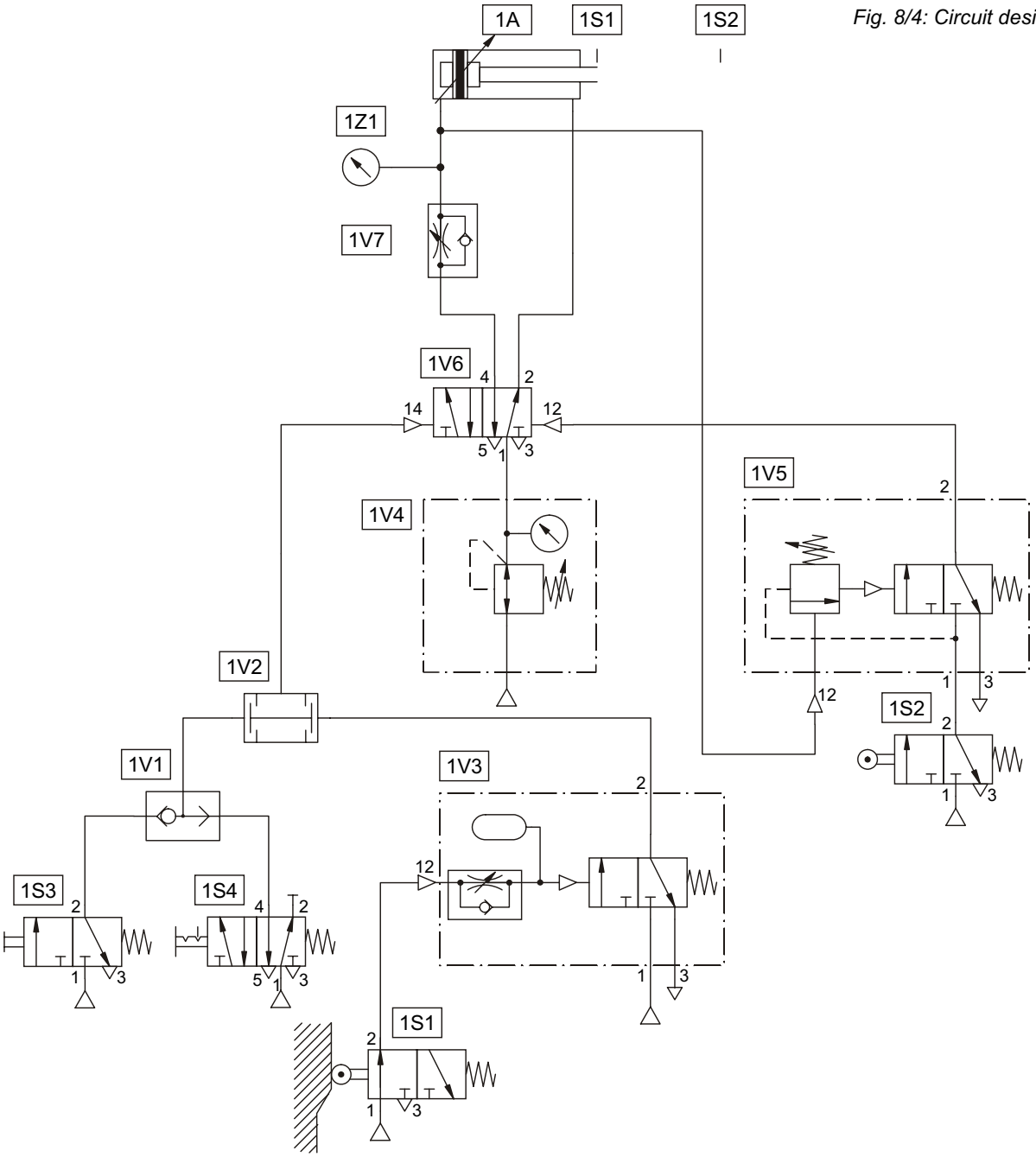

Fig. 8/4: Circuit design

The components – service unit with on-off valve (0Z1) and manifold (0Z2) are no longer shown in exercise 8 and from exercise 10 onwards..

Solution 8

Components list

Components	*Description*
0Z1	Service unit with on-off valve
0Z2	Manifold
1A	Double-acting cylinder
1S1	3/2-way roller lever valve, normally closed
1S2	3/2-way roller lever valve, normally closed
1S3	3/2-way valve with push button, normally closed
1S4	5/2-way valve with selector switch
1V1	Shuttle valve
1V2	Dual-pressure valve
1V3	Time delay valve, normally closed
1V4	Pressure regulator with pressure gauge
1V5	Pressure sequence valve
1V6	5/2-way double pilot valve
1V7	One-way flow control valve
1Z1	Pressure gauge

Switching point for workpieces

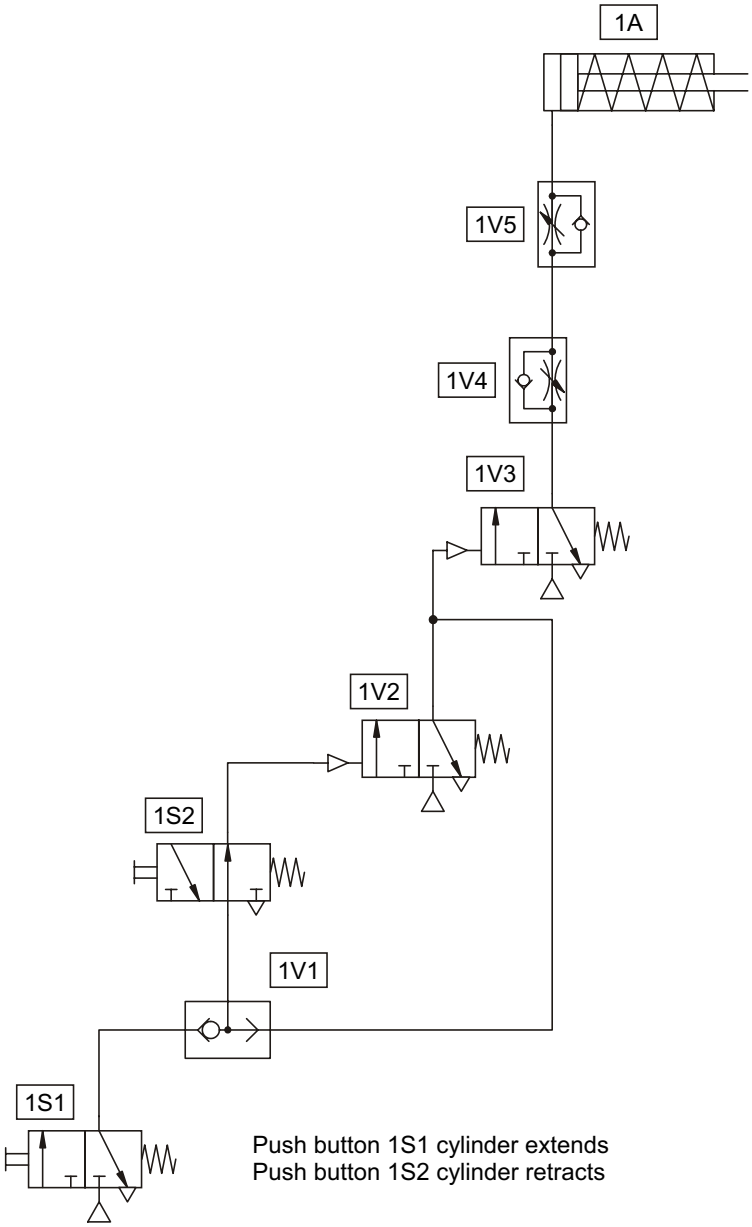

Fig. 9/2: Circuit diagram

Fig.9/3: Displacement-step diagram

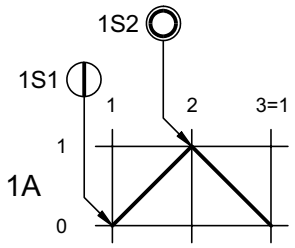

Solution description

Self-latching circuit

The group of valves (1S1), (1S2), (1V1) and (1V2) are arranged in a self-latching circuit. Actuation of a push button (1S1) causes a continuous on signal at the output of the valve (1V2). When the 3/2-way normally open valve (1S2) is actuated, the self-latching circuit is interrupted. A zero signal is present a the valve output (1V2). If both push buttons (1S1) and (1S2) are actuated, a zero signal is also present at the output (RS flip-flop behaviour with dominant off[4]).

Step 1-2

If the 3/2-way push button valve (1S1) is actuated, the single-acting cylinder (1A) is extended with flow control (1V5). The self-latching of the cylinder causes it to remain in the forward end position.

Step 2-3

After actuating the 3/2-way normally open valve (1S2), the cylinder retracts with flow control (1V4). The self-latching circuit is cancelled. The return spring causes the cylinder to remain in the retracted end position.

4 RS-flip-flop
R stands for reset
S stands for set

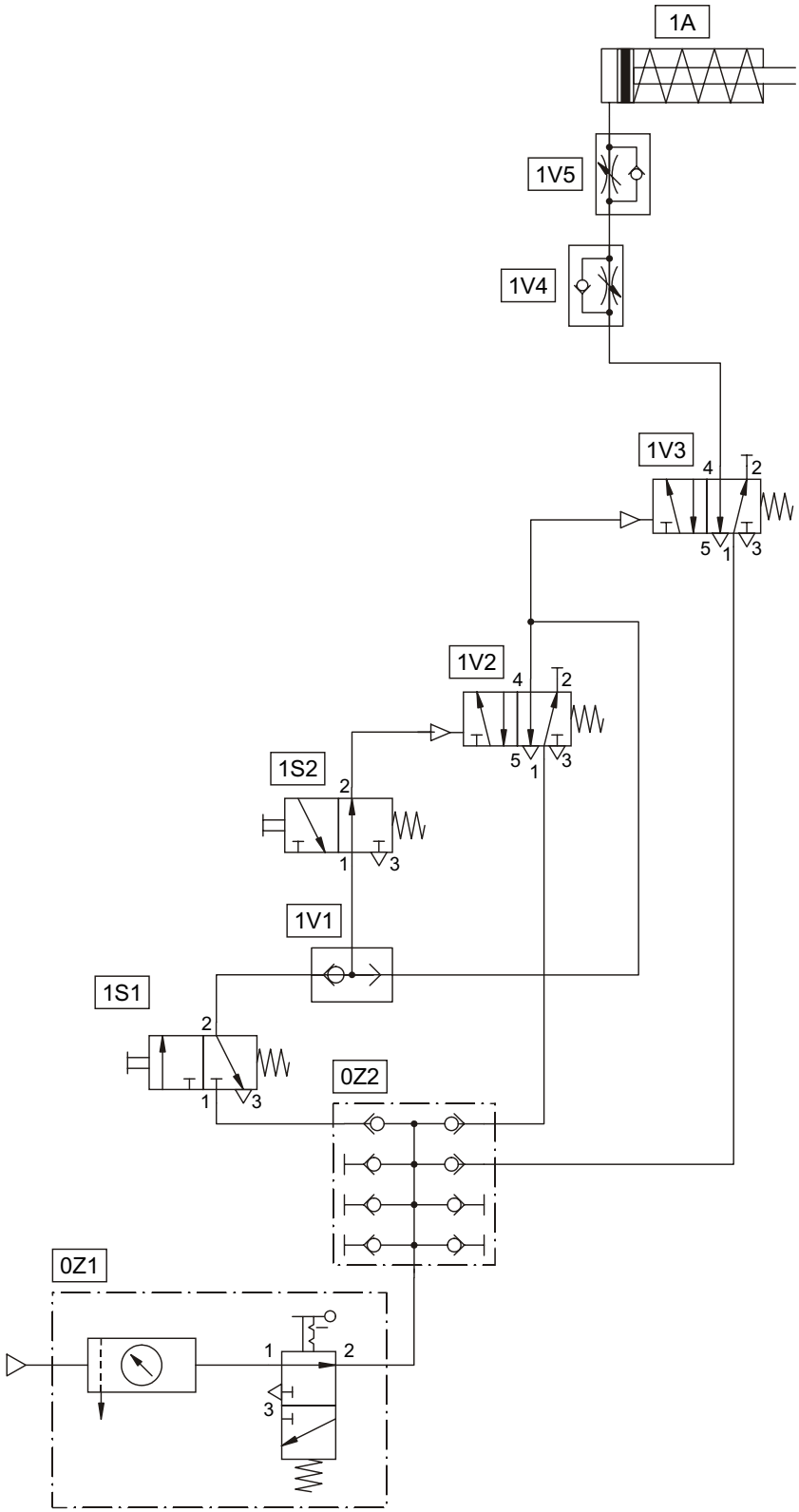

Fig. 9/4: Circuit design

Components list

Components	*Description*
0Z1	Service unit with on-off valve
0Z2	Manifold
1A	Single-acting cylinder
1S1	3/2-way valve with push button, normally closed
1S2	3/2-way valve with push button, normally open
1V1	Shuttle valve
1V2	5/2-way single pilot valve
1V3	5/2-way single pilot valve
1V4	One-way flow control valve
1V5	One-way flow control valve

Follow up

- Remove the final control element (1V3) from the control system and connect the quick push-pull connector (T-connector) directly with the one-way flow control valve (1V4). The valve (1V2) is now not only a control element, but also assumes the function of the final control element. Set the one-way flow control valves (1V4) and (1V5) with the regulating screw to high flow.

  Why do time delays now occur when setting and resetting the self-latching circuit?

- The pneumatic memory valve shown in the proposed solution is behaving as “dominant off”. Change the self-latching behaviour so that a “dominant on” function is caused.

- Replace the pneumatic memory valve (self-latching) by a mechanical memory valve (5/2-way pneumatic bi-stable valve)

  How is it possible to distinguish between the behaviour of the circuit variants when switching on again after power failure?

Vibrator for paint buckets

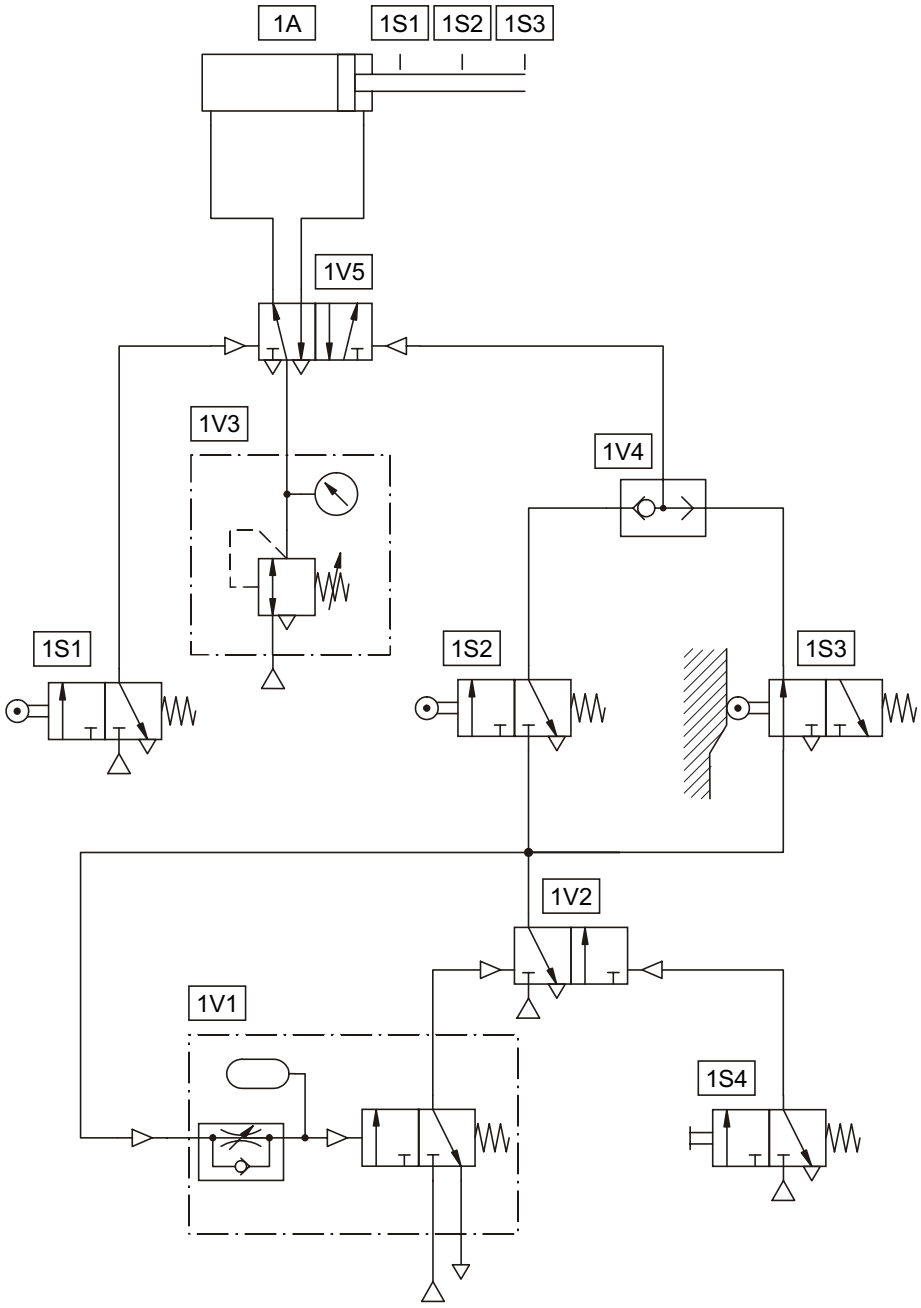

Fig. 10/2: Circuit diagram

Fig.10/3: Displacement-step diagram

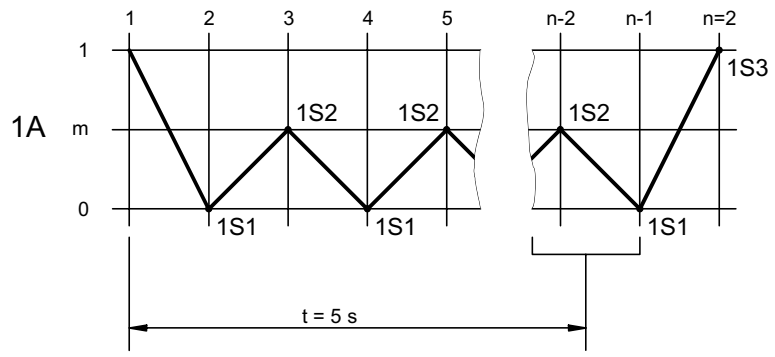

Solution description

Initial position

In the initial position, the cylinder assumes the forward end position and actuates the roller lever valve (1S3). The final control element (1V5) assumes the right-hand switching status. The memory valve (1V2) is also in the right-hand switching position.

Step 1-2

Actuating the push button (1S4) reverses the memory valve (1V2). Air is present at the pilot port of the time delay valve (1V1). The final control element (1V5) is reversed via the actuated roller lever valve (1S3) and the shuttle valve (1V4); the cylinder retracts. Travelling over the roller lever valve (1S2) does not yet have any effect. The trip cam actuates the roller lever valve (1S1) in the retracted end position.

Step 2-3

With the roller lever valve (1S1) actuated, the final control element (1V5) reverses. The cylinder partially extends and actuates the central roller lever valve (1S2).

Step 3-4

The cylinder is reversed again by actuation of the central roller lever valve (1S2). The reversing procedure for the valves (1S2), (1V4) and (1V5) lasts only a few milliseconds so that the trip cam does not travel over the roller lever valve (1S2).

Step 4-5

See step 2-3.

Oscillating movement

The cylinder oscillates backwards and forwards between the roller lever valves (1S1) and (1S2) until the specified time of t = 5 seconds has expired.

Steps n-2 to n

After the time delay valve (1V1) has been switched, the memory valve (1V2) is reversed. Roller lever valves (1S2) and (1S3) are no longer supplied with compressed air. The cylinder travels to the initial position (forward end position).

Fig. 10/4: Circuit design

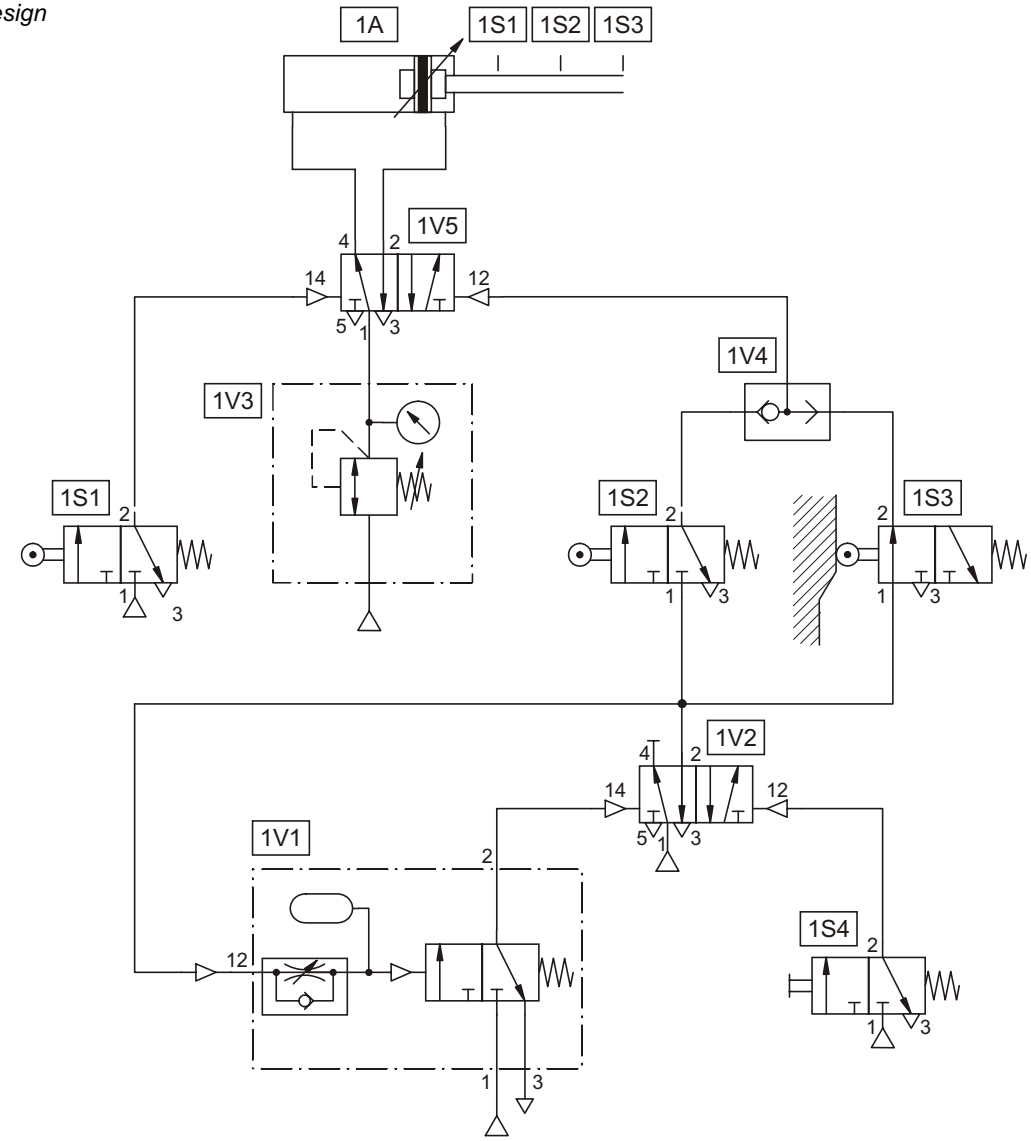

The components – service unit with on-off valve (0Z1) and manifold (0Z2) are no longer shown from exercise 10 onwards.

Components list

Components	*Description*
0Z1	Service unit with on-off valve
0Z2	Manifold
1A	Double-acting cylinder
1S1	3/2-way roller lever valve, normally closed
1S2	3/2-way roller lever valve, normally closed
1S3	3/2-way roller lever valve, normally closed
1S4	3/2-way with push button, normally closed
1V1	Time delay valve, normally closed
1V2	5/2-way double pilot valve
1V3	Pressure regulator with pressure gauge
1V4	Shuttle valve
1V5	5/2-way double pilot valve

Follow up

- Vary the quantity of air in the power valve (1V5) using the pressure regulator (1V3). Observe the behaviour of the actuator.

Feed rail separator

Fig. 11/2: Circuit diagram

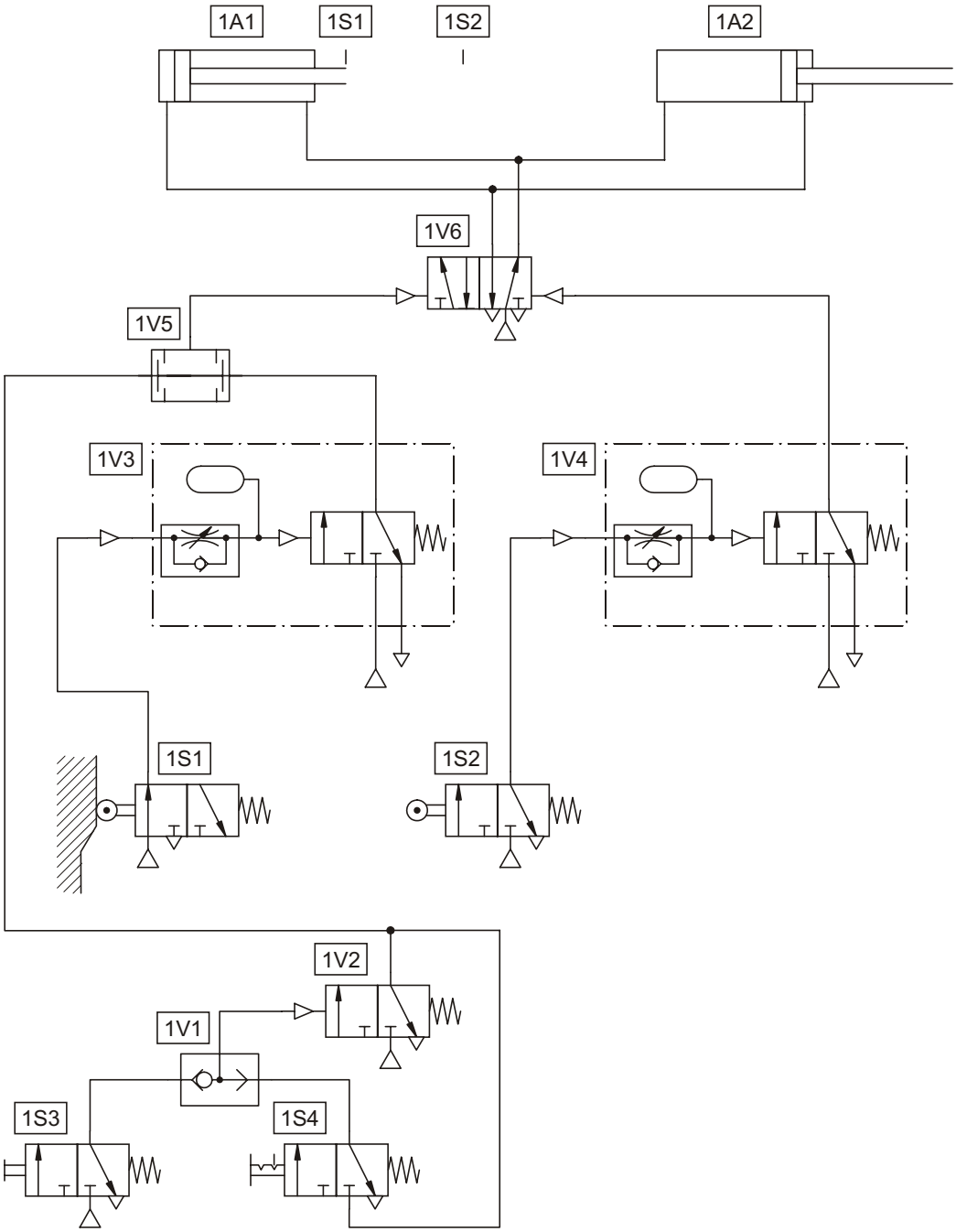

Only one time delay valve is contained in the set of equipment for the basic course. The second time delay valve (1V4) can be improvised by using a one-way flow control valve and a piece of tubing of about 1 m length (see circuit design).

The 3/2-way valve of the time delay valve (1V3) is actuated in the initial position.

Fig. 11/3: Displacement-step diagram

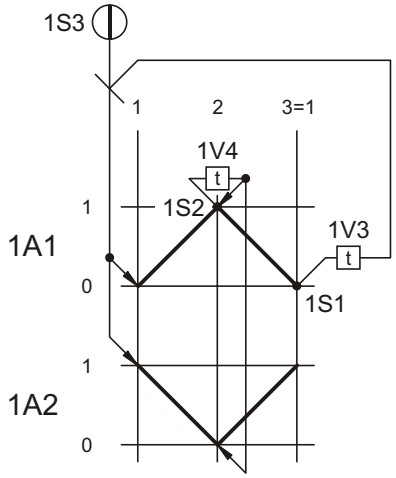

Solution description

Latching

In the group of valves (1S3), (1S4), (1V1) and (1V2), we have a latching circuit with “dominant off response” (RS flip flop behaviour with dominant off). If the valve with selector switch (1S4) is reversed, operation of the push button (1S3) provides a constant one-signal at the output of the valve (1V2). Resetting valve (1S4) interrupts the latching. The system will not restart on its own when compressed air is restored after a power failure.

Initial position

In the initial position, cylinder (1A1) is retracted and cylinder (1A2) advanced. The roller lever valve (1S1) is actuated. A one-signal is present at the output of time delay valve (1V3).

Step 1-2

After actuation of start button (1S3), valve (1V2) reverses. As pressure is applied to the right and left-hand side of the dual pressure valve (1V5), it switches through and the final control component (1V6) is reversed. The two cylinders move towards opposed end positions. Two spark plug blanks are fed to the machining device. Through actuation of the roller lever valve (1S2), time delay valve (1V4) receives a one-signal at the pilot port. The air reservoir is filled via the adjustable flow control valve. Filling time is to amount to t_1 = 1 second.

Step 2-3

When the reservoir of the time delay valve (1V4) has reached the switching pressure of p = 3 bar (= 300 kPa), the 3/2-way valve of the time delay valve switches through. The final control element (1V6) is then reversed. The two cylinders move into opposing end positions. Gravity causes a pair of spark plug blanks to roll out. Time delay valve (1V3) receives a one-signal at the pilot port through the actuated roller lever valve (1S1). After the set time of t_2 = 2 seconds, the dual pressure valve (1V5) receives a signal at the right-hand side and in this way a renewed start is possible.

Continuous cycle

If the valve with selector switch (1S4) is switched and start button (1S3) operated, the control system runs in continuous cycle. Reversing the valve with selector switch into the initial position stops the sequence at the end of a cycle.

Fig. 11/4: Circuit design

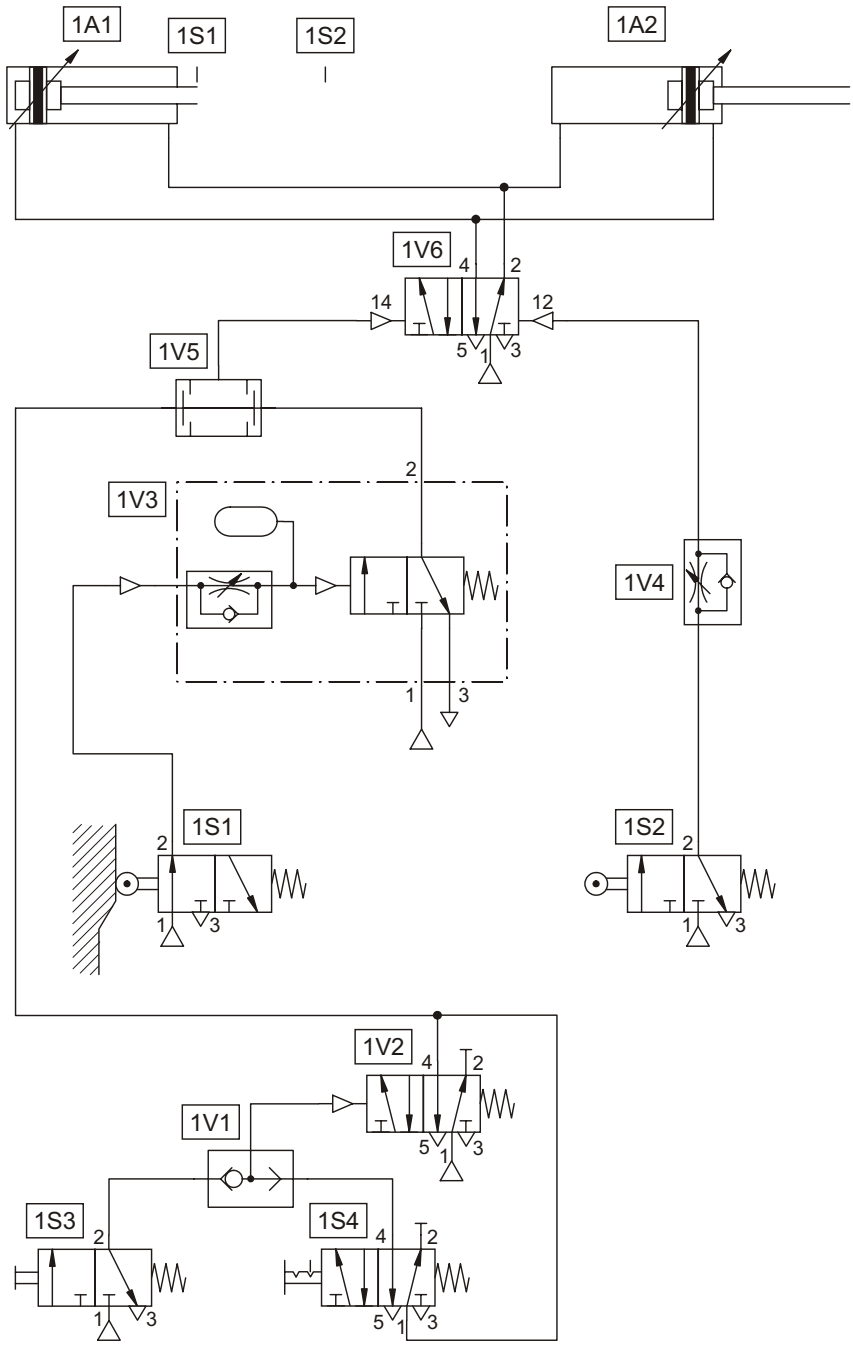

The one-way flow control valve (1V4) and a piece of tubing of about 1 m length to the final control element have the same effect as a time delay valve (see circuit diagram 1V3). However, please observe this gives rise to a creeping signal.

The components – service unit with on-off valve (0Z1) and manifold (0Z2) are no longer shown.

Components list

Components	*Description*
0Z1	Service unit with on-off valve
0Z2	Manifold
1A1	Double-acting cylinder
1A2	Double-acting cylinder
1S1	3/2-way roller lever valve, normally closed
1S2	3/2-way roller lever valve, normally closed
1S3	3/2-way valve with push button, normally closed
1S4	5/2-way valve with selector switch
1V1	Shuttle valve
1V2	5/2-way single pilot valve
1V3	Time delay valve, normally closed
1V4	One-way flow control valve
1V5	Dual-pressure valve
1V6	5/2-way double pilot valve

Follow up

Through final control valve (1V6), the cylinders are supplied with compressed air. Switch the pressure regulator to input 1 of the final control element.

- Lower the operating pressure in steps of p = 1 bar (= 100 kPa). Observe the changed advancing and returning of the cylinders.

As the frictional forces of two cylinders are generally different, parallel running of the cylinders can be achieved to a limited extent only (see also exercises 12 and 13).

Welding machine for thermoplastics

Fig. 12/2: Circuit diagram

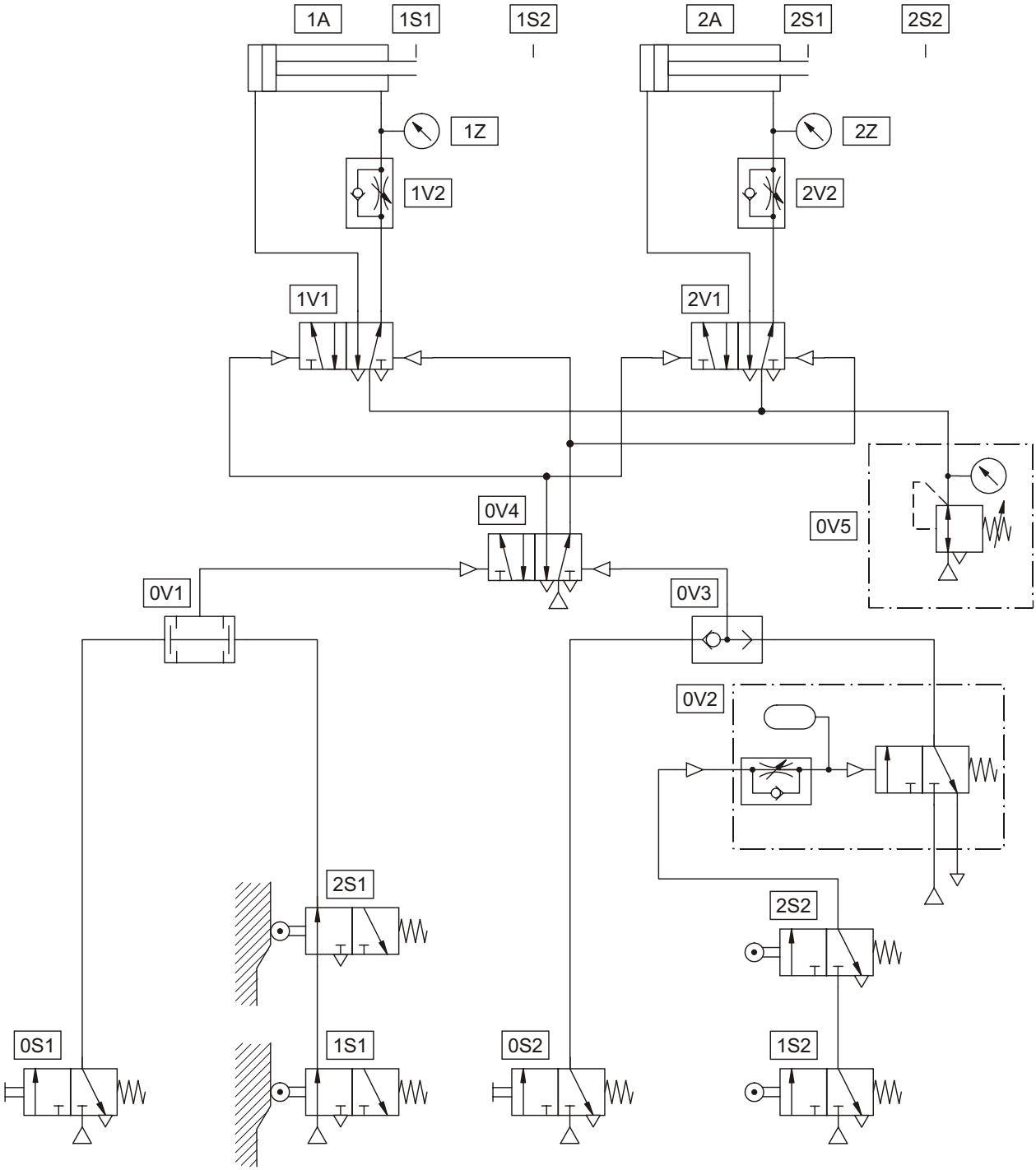

There are three roller lever valves in the set of equipment of “Basic level TP101". For building the circuit shown, four roller lever valves are needed. As an expedient, roller lever valve (2S2), for example, could be omitted..

Fig. 12/3: Displacement-step diagram

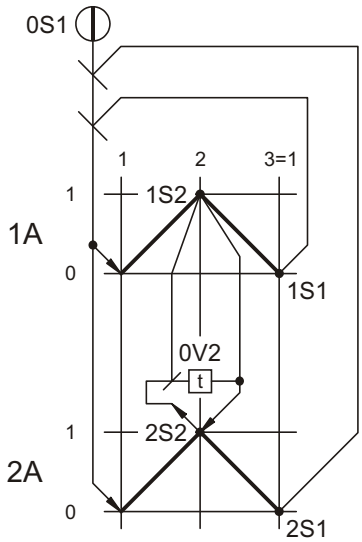

Solution description

Initial position

In the initial position, both cylinders (1A) and (2A) assume the retracted end position. The roller lever valves (1S1) and (2S1) are actuated. Final control elements (1V1) and (2V1) and directional control valve (0V4) are in the left-hand switching position.

Step 1-2

When push button (0S1) is operated, first directional control valve (0V4) and then final control elements (1V1) and (2V1) are reversed. Both cylinders advance with their exhaust air restricted. In the forward end position, roller lever valves (1S2) and (2S2) are actuated. The cylinders remain in the forward end position. The pilot port of time delay valve (0V2) is pressurised via the two roller lever valves (1S2) and (2S2). The valve is required to switch when a time lag of t =1.5 seconds has elapsed.

Step 2-3

After the time delay valve (0V2) has switched through, the three identical 5/2-way double pilot (bi-stable) valves reverse. The cylinders move into the retracted position and there again actuate the roller lever valves (1S1) and (2S1).

Push button (0S2)

If 3/2-way valve (0S2) is operated, the three identical 5/2-way double pilot (bi-stable) valves(1V1), (2V1) and (0V4) are reversed; the cylinders return to the retracted end position.

Fig. 12/4: Circuit design

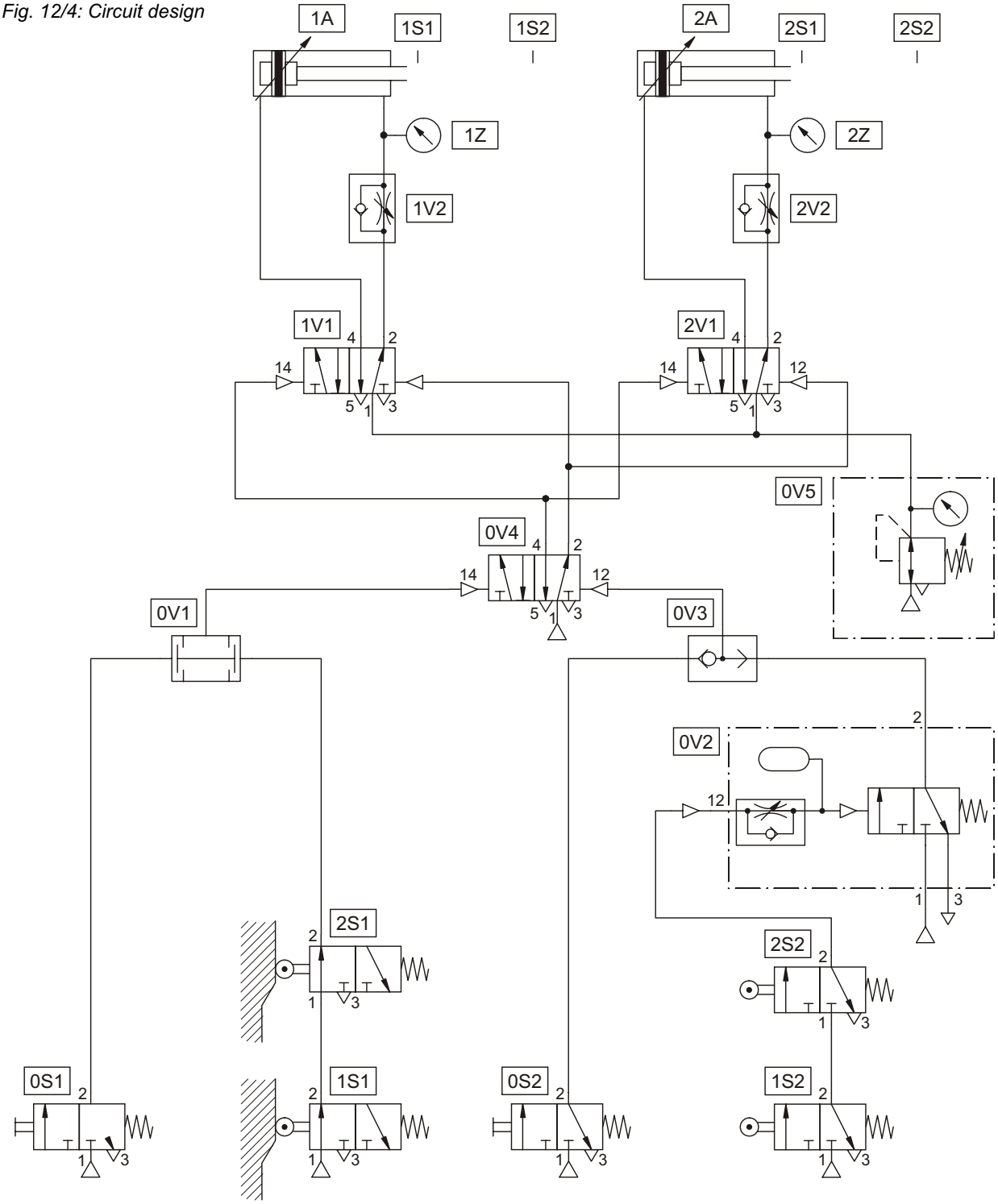

There are 3 roller lever valves in the set of equipment for “Basic level TP101". To build to the circuit diagram shown, you need four roller lever valves. As an expedient, roller lever valve (2S2), for example, may be omitted.

The components – service unit with on-off valve (0Z1) and manifold (0Z2) are no longer shown..

Components list

Components	*Description*
0S1	3/2-way valve with push button, normally closed
0S2	3/2-way valve with push button, normally closed
0V1	Dual pressure valve
0V2	Time delay valve, normally closed
0V3	Shuttle valve
0V4	5/2-way double-pilot valve
0V5	Pressure regulator with pressure gauge
0Z1	Service unit with on-off valve
0Z2	Manifold
1A	Double-acting cylinder
1S1	3/2-way roller lever valve, normally closed
1S2	3/2-way roller lever valve, normally closed
1V1	5/2-way double pilot valve
1V2	One-way flow control valve
1Z	Pressure gauge
2A	Double-acting cylinder
2S1	3/2-way roller lever valve, normally closed
2S2	3/2-way roller lever valve, normally closed
2V1	5/2-way double pilot valve
2V2	One-way flow control valve
2Z	Pressure gauge

Follow up

- Reduce the pressure from the pressure regulator (0V5) in steps of p = 1 bar (= 100 kPa). Observe the behaviour of the cylinders and the readings on the pressure gauges.
- Regarding the note on the opposite page: Replace the fourth roller lever valve (2S2) by a roller lever valve with idle return. Investigate the behaviour of the control system with different settings of one-way flow control valves (1V2) and (2V2).

Quarry stone sorter

Fig. 13/3: Circuit diagram

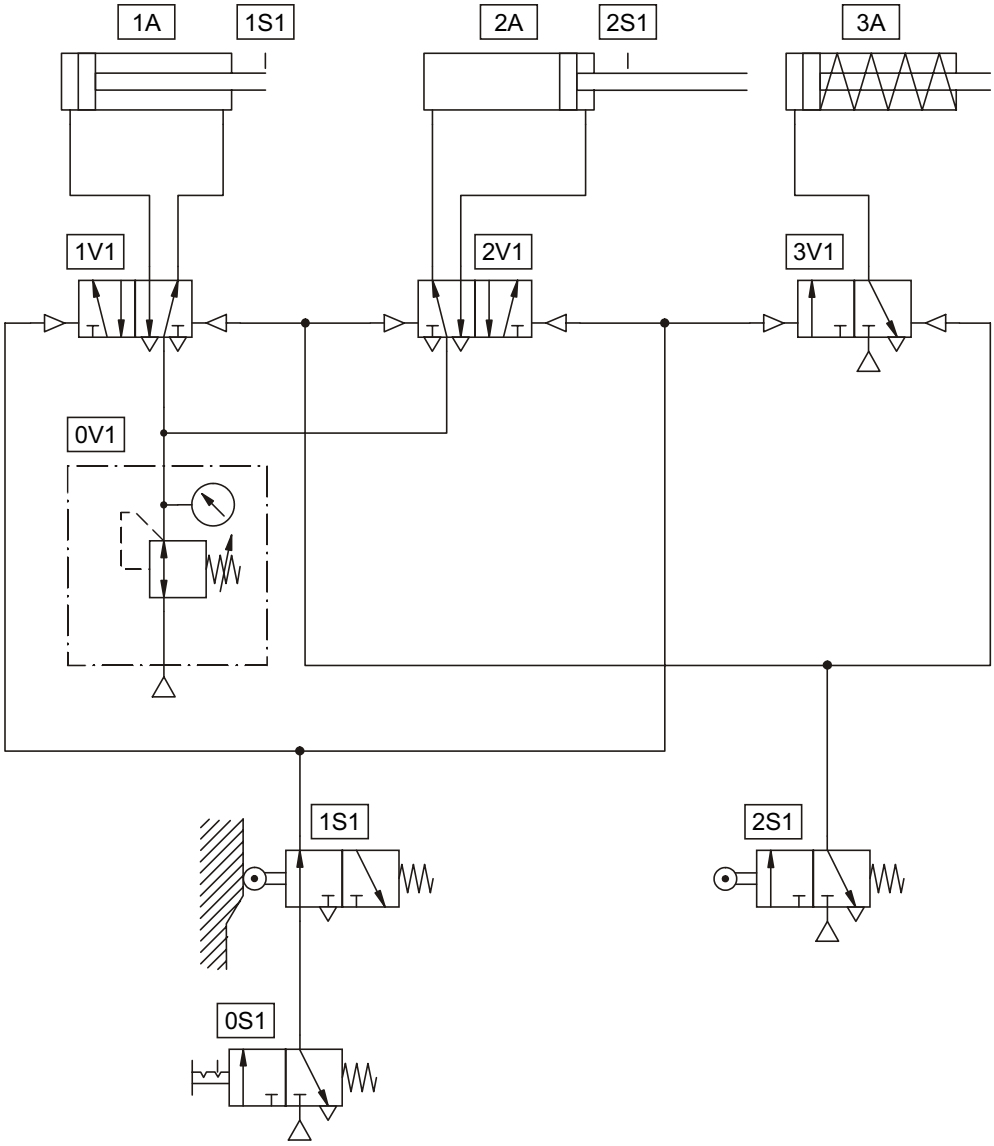

Abbreviated notation

1A+ 1A−

2A− 2A+

3A+ 3A−

Solution description

Initial position

In the initial position, double acting cylinder (1A) – upper sieve – and single-acting cylinder (3A) – unclogger – assume the retracted end position; the double-acting cylinder (2A) – lower sieve – rests in the forward end position. Roller lever valve (1S1) is actuated.

Step 1-2

After operation of the valve with selector switch (0S1) final controlelements (1V1), (2V1) and (3V1) are reversed. Cylinders (1A) and (3A) move forward; cylinder (2A) retracts and actuates the roller lever valve (2S1).

Step 2-3

Through the actuation of roller lever valve (2S1), all final control elements again reverse. Cylinder (2A) moves forward; cylinder (3A) retracts. Cylinder (1A) likewise retracts and again actuates the roller lever valve (1S1).

Continuous cycle

As long as valve (0S1) remains switched, the motion sequence will be repeated. If the valve (0S1) is brought to the initial start position, the system remains in its initial position at the end of a cycle.

Fig. 13/4: Circuit design

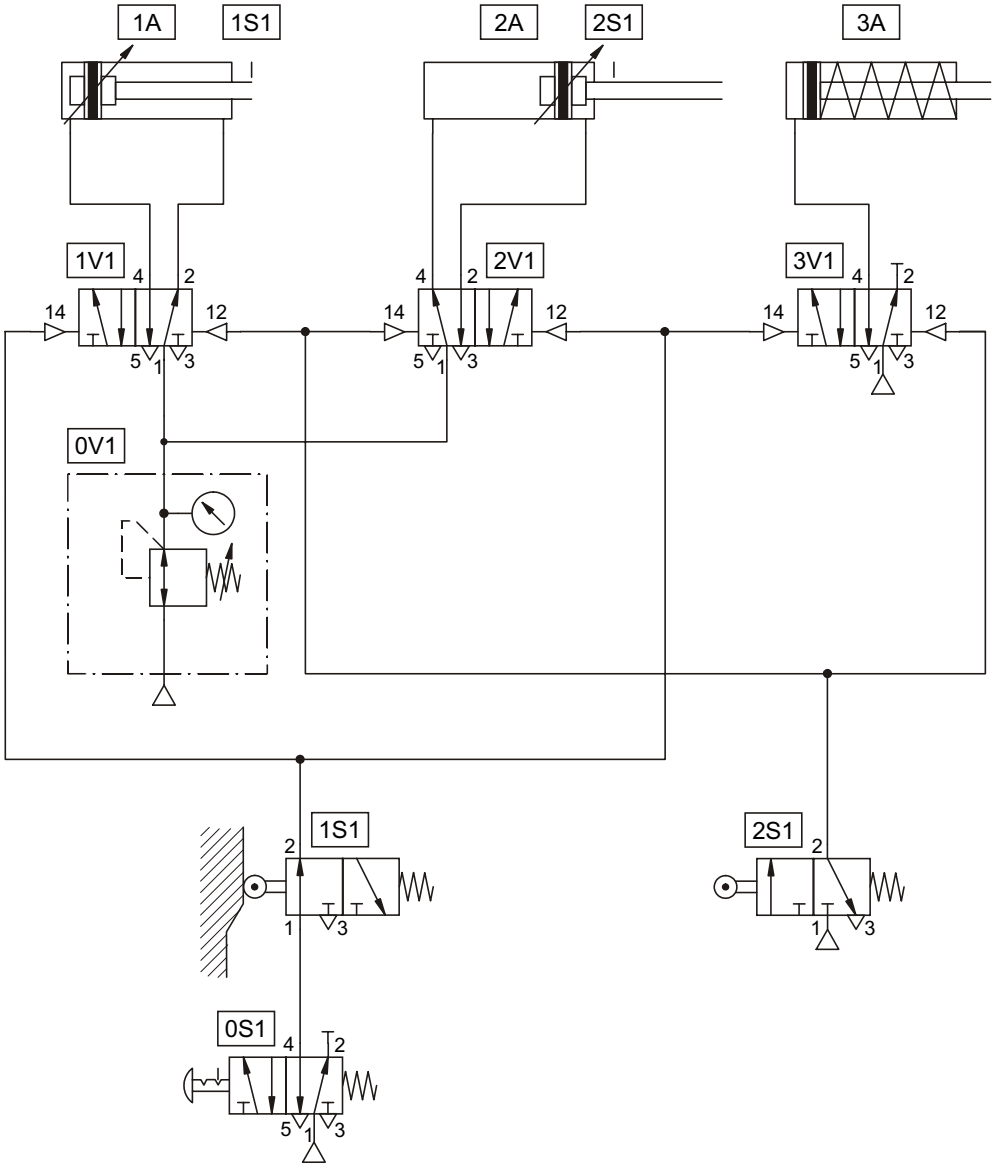

Components – service unit with on-off valve (0Z1) and manifold (0Z2), are no longer shown.

Components list

Components	*Description*
0S1	5/2-way valve with selector switch
0V1	Pressure regulator with pressure gauge
0Z1	Service unit with on-off valve
0Z2	Manifold
1A	Double-acting cylinder
1S	3/2-way roller lever valve, normally closed
1V	5/2-way double pilot valve
2A	Double-acting cylinder
2S1	3/2-way roller lever valve, normally closed
2V1	5/2-way double pilot valve
3A	Single-acting cylinder
3V1	5/2-way double-pilot valve

Follow up

The stroke time of cylinders is generally not the same.The time taken for one stroke is dependent on:

- cylinder dimensions
- power supplied (tubing size and pressure)
- external forces
- whether forward or return stroke etc.

Although all three cylinders are actuated from one signal generator, the three cylinders do not reach the end position at the same time. Observe these events in more detail.

- Draw up a modified displacement-step diagram.

On the assumption that the return strokes of cylinders (2A) and (1A) are the slowest, the following displacement-step diagram results.

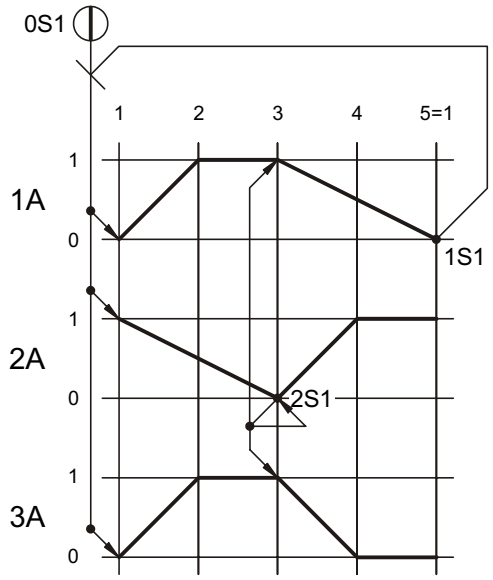

Fig. 13/5: Modified displacement-step diagram [5]

5 The modified displacement-step diagram with signal lines is not in accordance with VDI 3260.

Compactor for domestic rubbish

Fig. 14/3: Circuit diagram

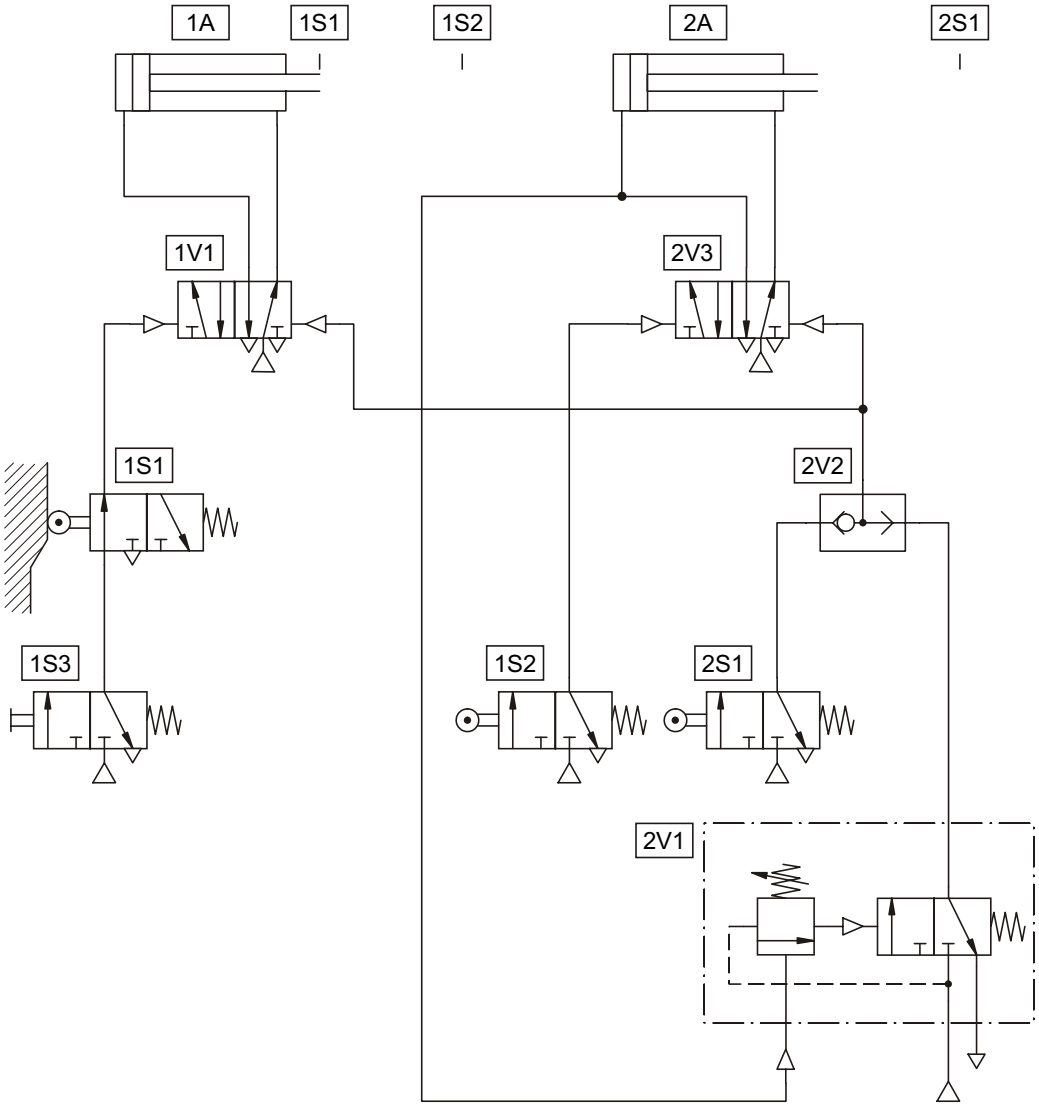

Abbreviated notation **1A+ 2A+ 1A− 2A−**

Solution description

Initial position

In the initial position, both cylinders are in the retracted end position. Roller lever valve (1S2) is actuated.

Step 1-2

After operation of push button (1S3), final control valve (1V1) – also referred to as power valve – is reversed. Cylinder (1A) advances. In the forward end position, the trip cam activates roller lever valve (1S2).

Step 2-3

Through the actuation of roller lever valve (1S2), final control valve (2V3) is reversed. Cylinder (2A) advances. In the forward end position, the cylinder actuates roller lever valve (2S1).

Step 3-4

The actuation of roller lever valve (2S1) causes both final control valves (1V1) and (2V3) to be pressurised from the right; both cylinders are reversed. In the retracted end position, cylinder (1A) again actuates the roller lever valve (1S1).

Pressure sequence valve (2V1)

If cylinder (2A) fails to reach the forward end position because the rubbish bin is full, the pressure sequence valve reverses both power valves via the shuttle valve (2V2). Both cylinders return.

Follow up The two cylinders **do not** return simultaneously!

- Take a closer look at what really happens. Draw up a modified displacement-step diagram.

Fig. 14/4: Circuit design

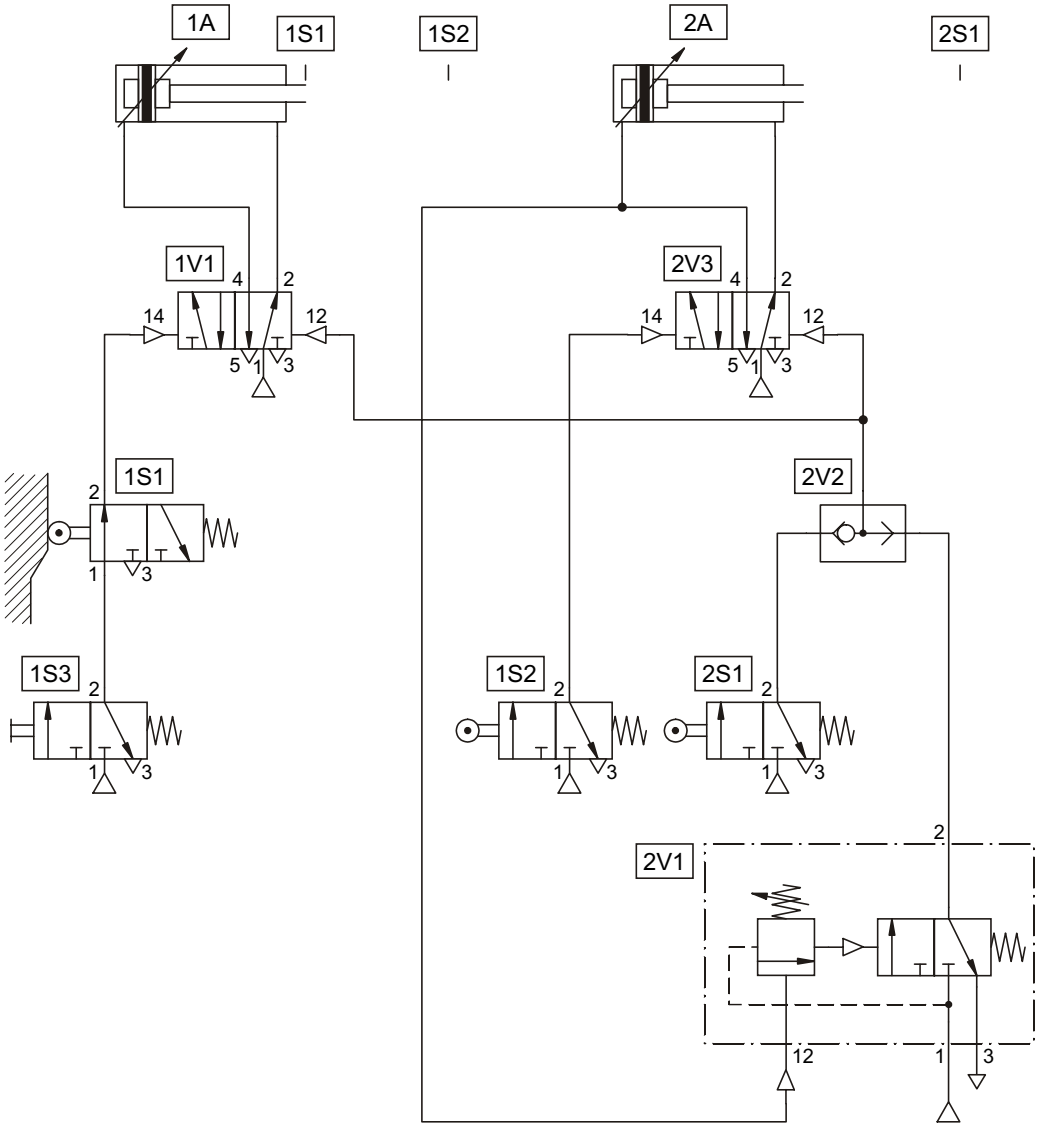

If you fit one-way flow control valves between cylinders and power valves – also referred to as final control valve – (exhaust restriction during forward stroke), you are in a position to slow down the motion process considerably and thus improve control.

Components – service unit with on-off valve (0Z1) and manifold (0Z2) are no longer shown.

Components list

Components	*Description*
0Z1	Service unit with on-off valve
0Z2	Manifold
1A	Double-acting cylinder
1S1	3/2-way valve with push button, normally closed
1S2	3/2-way roller lever valve, normally closed
1S3	3/2-way roller lever valve, normally closed
1V1	5/2-way double pilot valve
2A	Double-acting cylinder
2S1	3/2-way roller lever valve, normally closed
2V1	Pressure sequence valve
2V2	Shuttle valve
2V3	5/2-way double pilot valve

Time lag Δt is a delay during the return of the main compactor (2A) inherent in the system. Final control valve (2V) can reverse only when the trip cam of the pre-compactor (1A) no longer activates roller lever valve (1S3).

Fig. 14/5: Modified displacement-step diagram

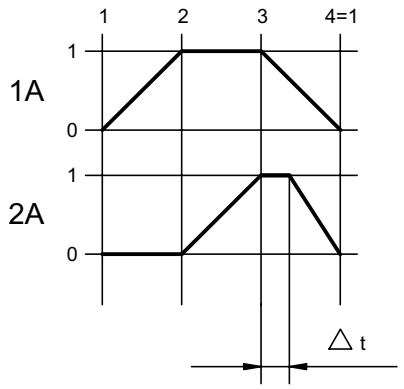

Clamping camera housings

Fig. 15/2: Circuit diagram A

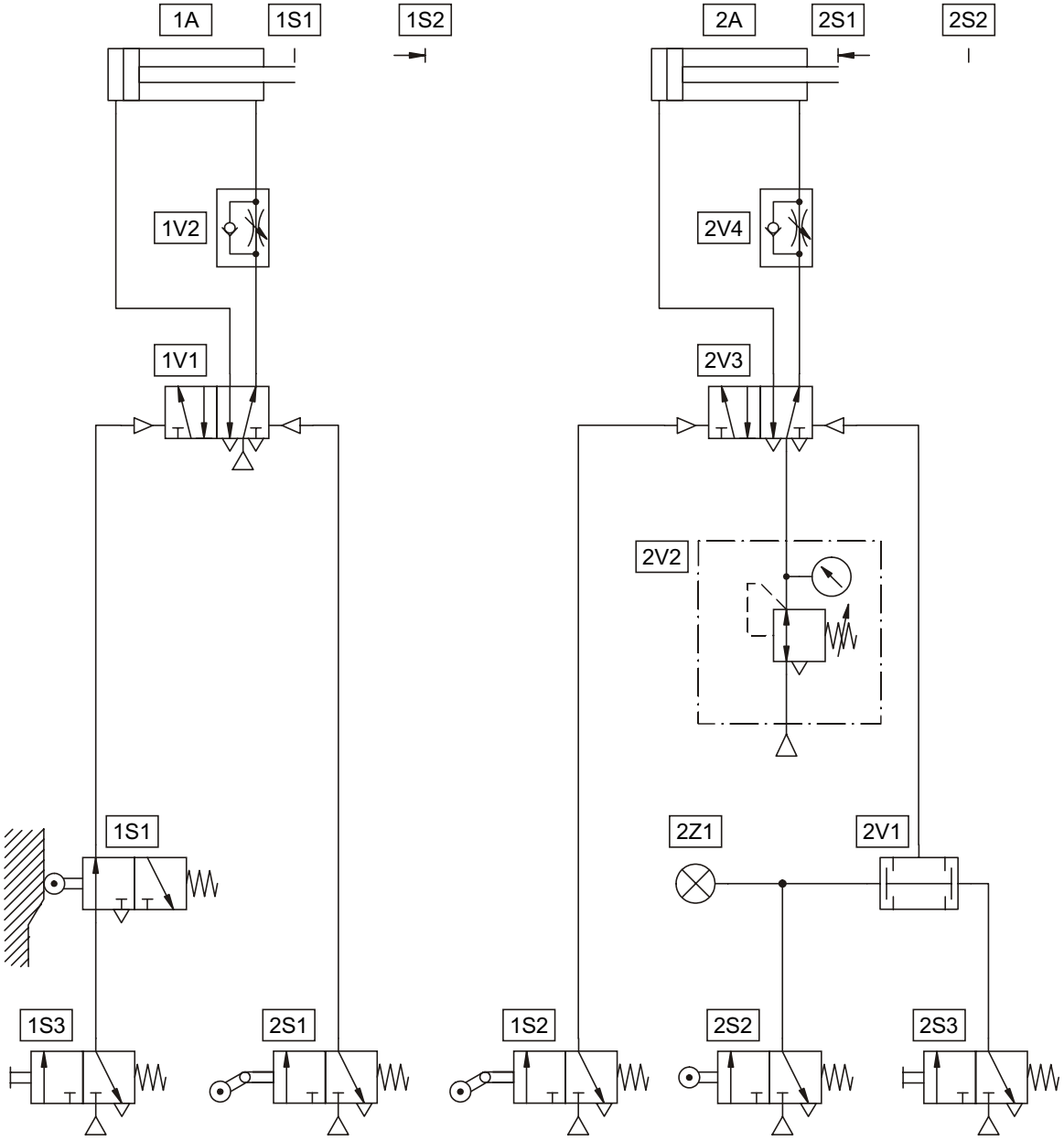

Abbreviated notation

1A+ 2A+ 2A− 1A−

Fig.15/3: Displacement-step diagram

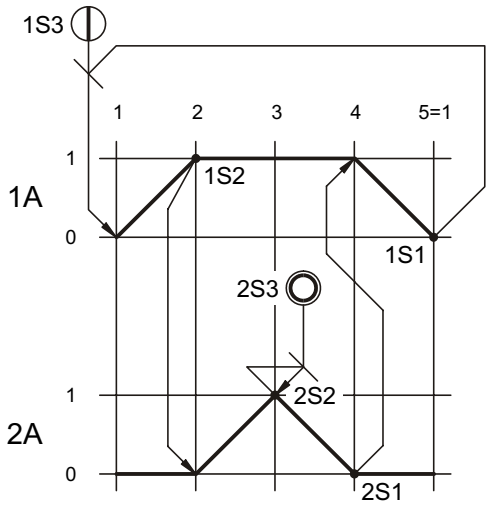

Solution description

Initial position

In the initial position, the two cylinders (1A) and (2A) assume the retracted end position. The roller lever valve (1S1) is activated. The roller lever valve with idle return (2S1) is not activated.

Step 1-2

When push button (1S3) is operated, a one-signal goes out to directional control valve (1V1) via the depressed roller lever valve (1S1). After the reversal of the 5/2-way double pilot valve (1V1), the cylinder (1A) advances with exhaust air restricted (1V2). Shortly before reaching the forward end position, the 3/2-way idle return roller lever valve (1S2) becomes actuated.

Step 2-3

The actuation of the idle return roller lever valve (1S2) reverses power valve (2V3); cylinder (2A) advances with its exhaust air restricted (2V4). With the actuation of roller lever valve (2S2) in the forward end position, the pneumatically activated optical indicator (2Z1) displays the one-signal. The control system remains in this position. The pressure regulator (2V2) limits the piston thrust (pressure limitation p = 4 bar = 400 kPa).

Step 3-4

With the operation of push button (2S3), power valve (2V3) is reversed through dual-pressure valve (2V1). The cylinder (2A) returns. Just before the retracted end position is reached, the trip cam triggers the roller lever (2S1).

Step 4-5

Power valve (1V1) is reversed through the actuation of idle return roller lever valve (2S1). Cylinder (1A) returns. In the returned end position, the trip cam switches the start interlock (1S1).

Fig. 15/4: Circuit design

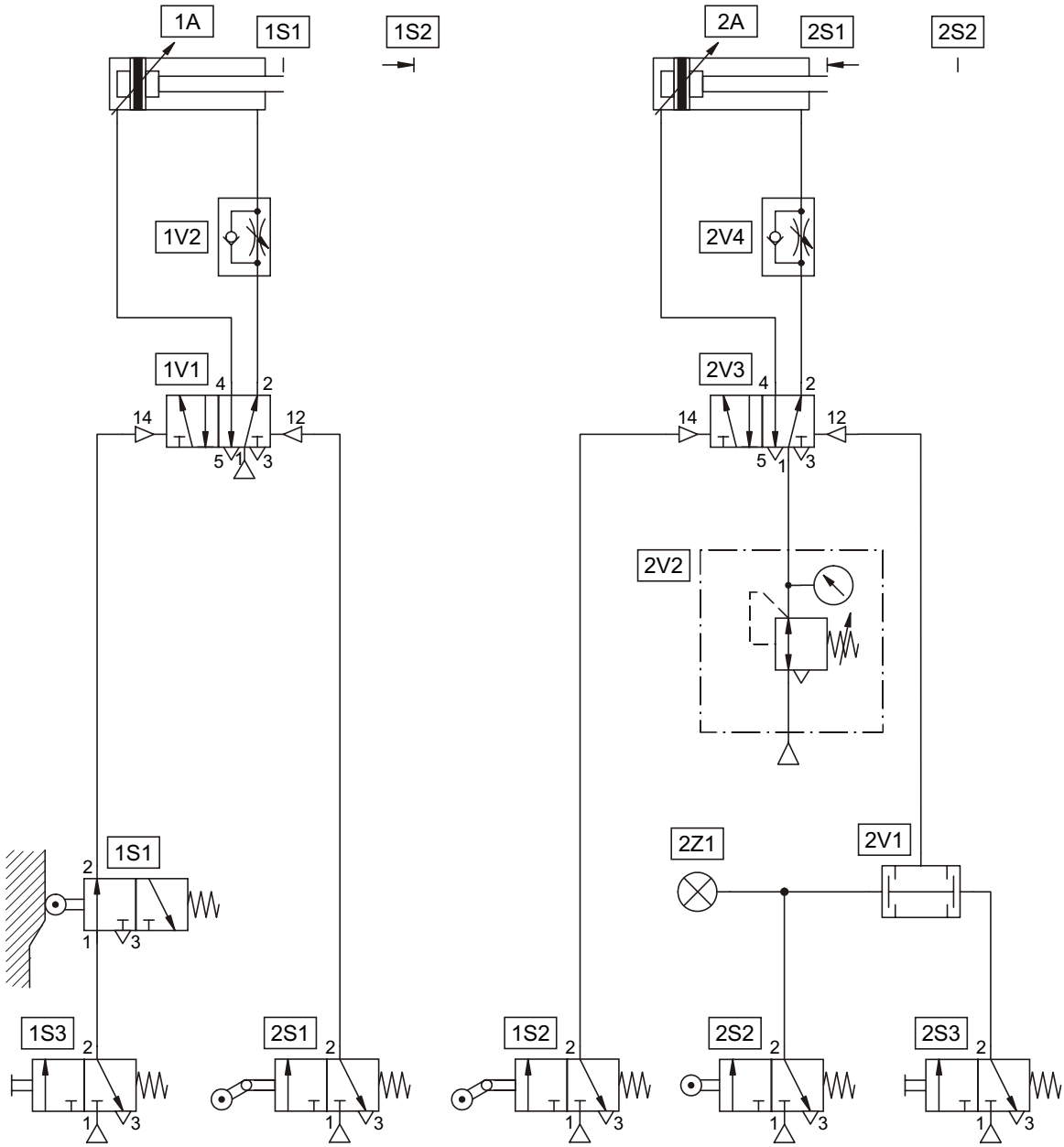

Components – service unit with on-off valve (0Z1) and manifold (0Z2) are no longer shown.

Components list

Components	*Description*
0Z1	Service unit with on-off valve
0Z2	Manifold
1A	Double-acting cylinder
1S1	3/2-way valve with push button, normally closed
1S2	3/2-way roller lever valve, normally closed
1S3	3/2-way roller lever valve with idle return, normally closed
1V1	5/2-way double pilot valve
1V2	One-way flow control valve
2A	Double-acting cylinder
2S1	3/2-way roller lever valve with idle return, normally closed
2S2	3/2-way roller lever valve, normally closed
2S3	3/2-way valve with push button, normally closed
2V1	Dual-pressure valve
2V2	Pressure regulator with pressure gauge
2V3	5/2-way double pilot valve
2V4	One-way flow control valve
2Z1	Optical display

Follow up

- Draw up the displacement-time diagram of the system you have built, using a stop watch.
- Replace the idle return roller lever valves (2S1) and (1S2) by ordinary roller lever valves. Why does the system no longer function?
- Write the abbreviated notation with division into groups (two groups).
- Build the alternative circuit B with a reversing valve.

Fig. 15/5: Displacement-time diagram

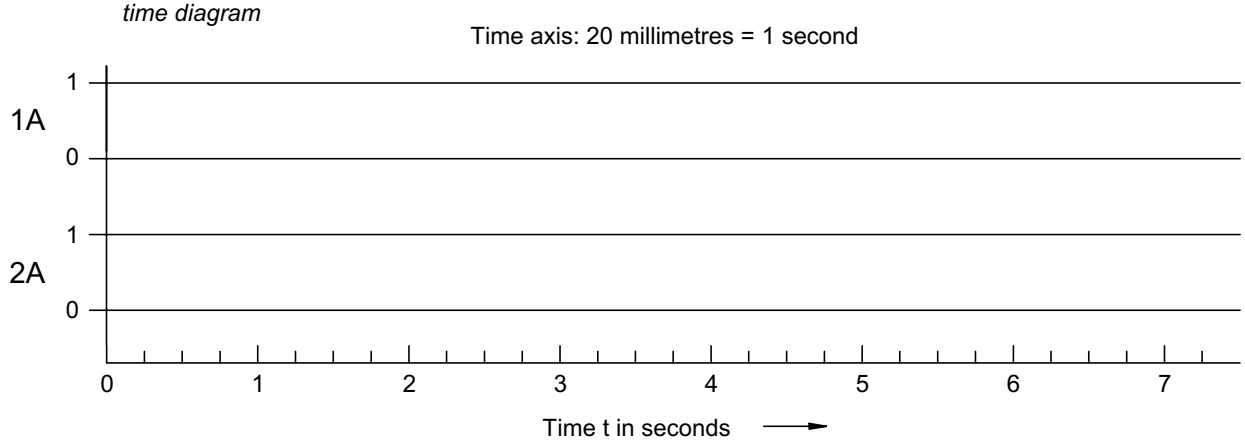

Abbreviated notation

With division into groups for alternative circuit B

| **1A+** **2A+** | **2A−** **1A−** |

One can see from the abbreviated notation that the motion sequence envisaged requires a division into at least two groups. A reversing valve is necessary in order to be able to form two separate circuits.

Note regarding solution

The problem of switching off a counter signal still present at the power valves is solved here by using a reversing valve (0V2). In this way, one does not have to fit idle return roller lever valves. This increases operational reliability.

Fig. 15/6: Circuit diagram B

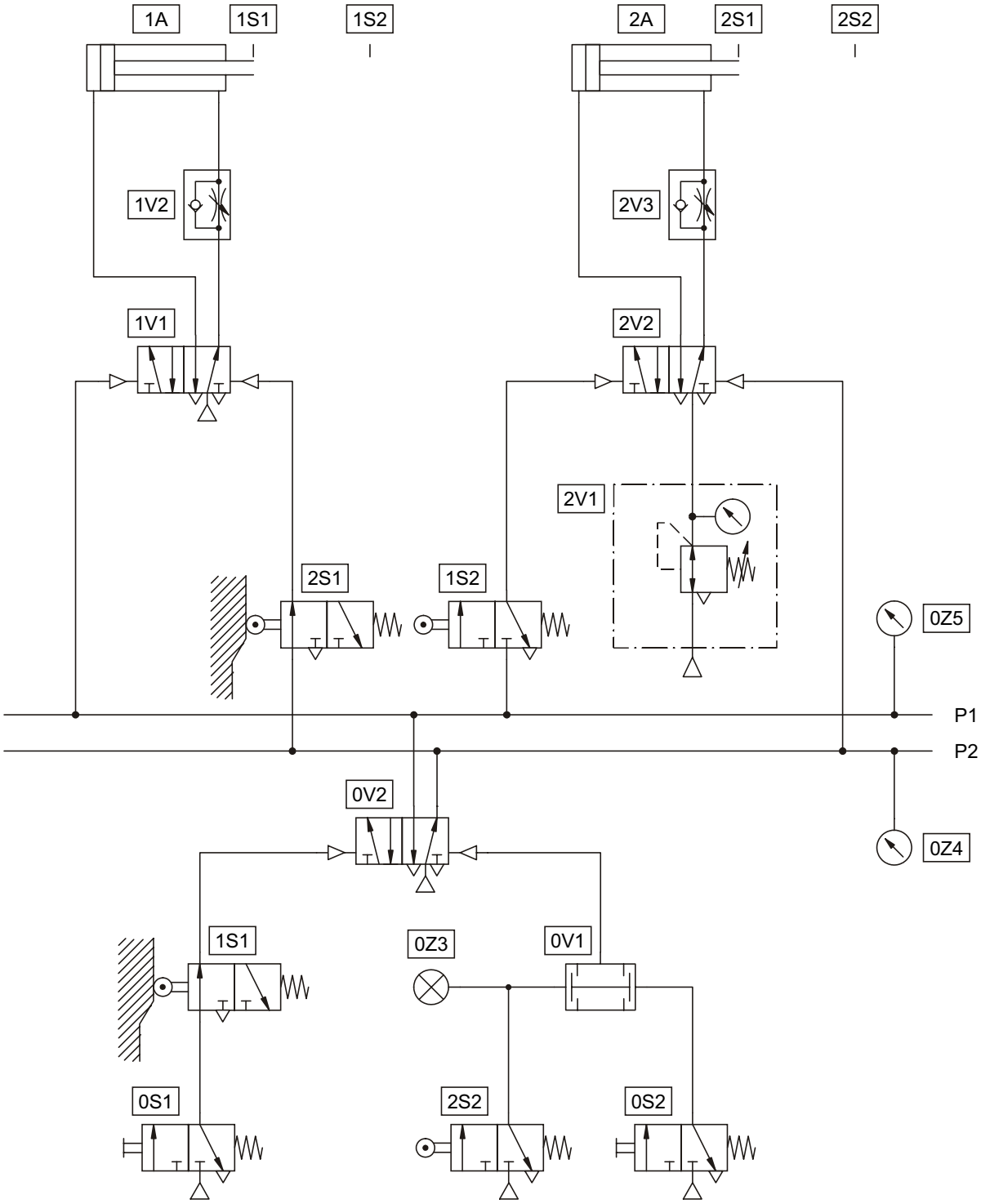

Input station for laser cutter

Fig. 16/2: Circuit diagram A

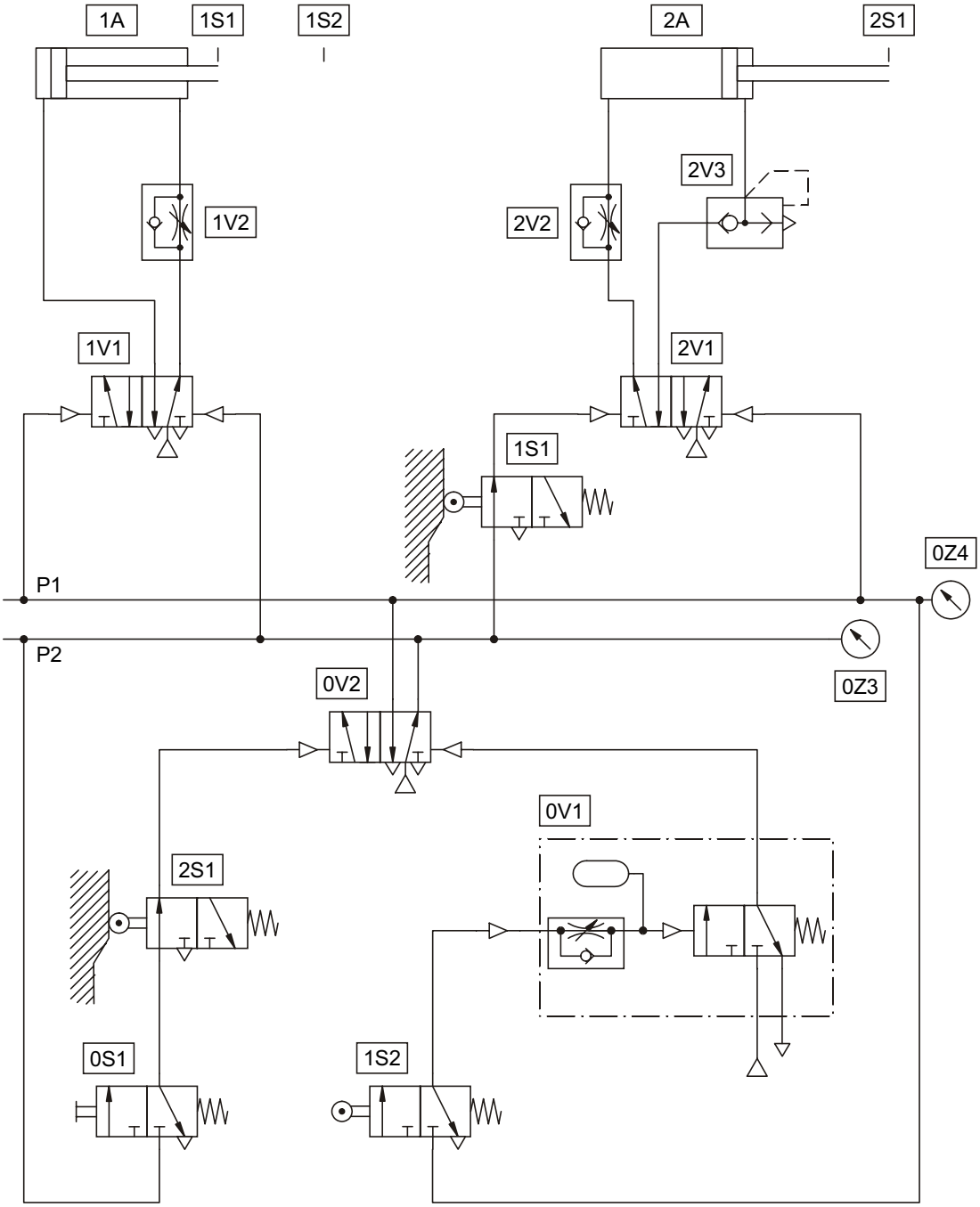

Abbreviated notation with division into groups

1A+ 2A- | **1A- 2A+**

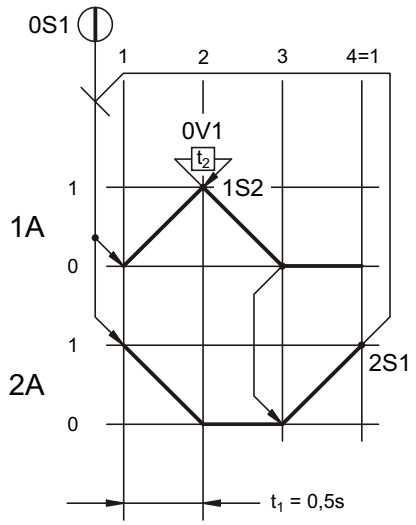

Fig. 16/3: Displacement-step diagram

Solution description

Initial position

In the initial position, the reversing valve (0V2) supplies air to line P2. The pressure gauge (0Z3) registers the signal. The clamping cylinder (1A) is retracted and actuates the roller lever valve (1S1). Ejector cylinder (2A) is advanced and actuates the roller lever valve (2S1).

Step 1-2

If push button (0S1) is operated, reversing valve (0V2) switches and supplies air to line P1, line P2 is exhausted. Both power valves (1V1) and (2V1) are reversed. The ejector cylinder (2A) is retracted with its exhaust air restricted (2V2); at the same time clamping cylinder (1A) goes forward, likewise with exhaust air restricted (1V2) and actuates roller lever valve (1S2). Clamping time t_1 =0.5 seconds is set by means of one-way flow control valves (1V2) and (2V2). Actuation of roller lever valve (1S2) supplies pressure to the pilot port of time delay valve (0V1). During the set clamping time of t_2 = 5 seconds, the air reservoir (pneumatic memory) of the time delay valve is filled.

Step 2-3

Switching through time delay valve (0V1) actuates reversing valve (0V2). Line P2 is pressurised (0Z3), line P1 exhausted (0Z4). After reversal of power valve, (1V1) clamping cylinder (1A) is retracted without restriction and, in its retracted end position, actuates roller lever valve (1S1).

Step 3-4

After the actuation of roller lever valve (1S1), power valve (2V1) is reversed. Ejector cylinder (2A) advances rapidly. The fast forward motion is achieved through quick exhaust valve (2V3) and the shortest possible length of tubing between the cylinder and quick exhaust valve.

Fig. 16/4:Circuit design A

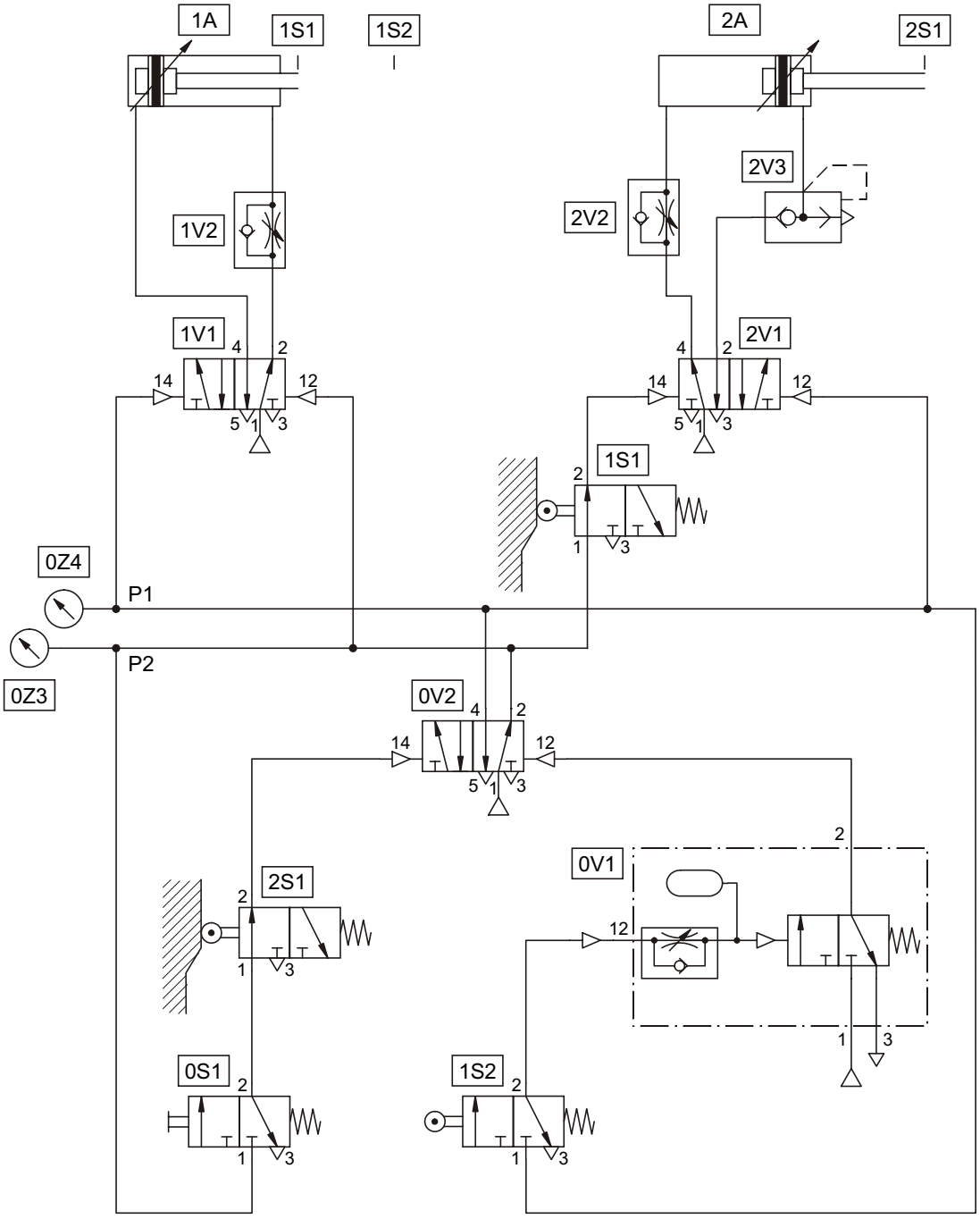

The components – service unit with on-off valve (0Z1) and manifold (0Z2) are no longer shown.

Components list

Components	*Description*
0S1	3/2-way valve with push button, normally closed
0V1	Time delay valve, normally closed
0V2	5/2-way double pilot valve
0Z1	Service unit with on-off valve
0Z2	Manifold
0Z3	Pressure gauge
0Z4	Pressure gauge
1A	Double-acting cylinder
1S1	3/2-way roller lever valve, normally closed
1S2	3/2-way roller lever valve, normally closed
1V1	5/2-way double pilot valve
1V2	One-way flow control valve
2A	Double-acting cylinder
2S1	3/2-way roller lever valve, normally closed
2V1	5/2-way double pilot valve
2V2	One-way flow control valve
2V3	Quick exhaust valve

Follow up

The following valve ports may also be connected directly to the air supply.

– Start push button 0S1 - 1

– Roller lever valve 1S2 - 1

However, this reduces the reliability of operation.

- Draw up the displacement-time diagram of the assembled circuit by using a stop watch.

Fig. 16/5: Displacement-time diagram

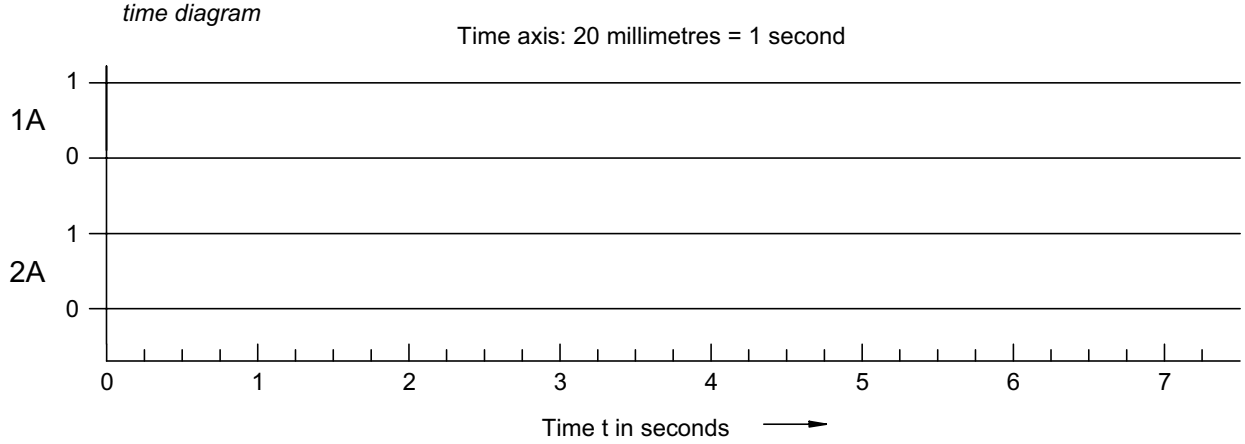

Alternative circuits Assemble alternative circuits B, C and D. Investigate the advantages and disadvantages of the different alternatives.

Components – service unit with on-off valve (0Z1) and manifold (0Z2), are no longer shown.

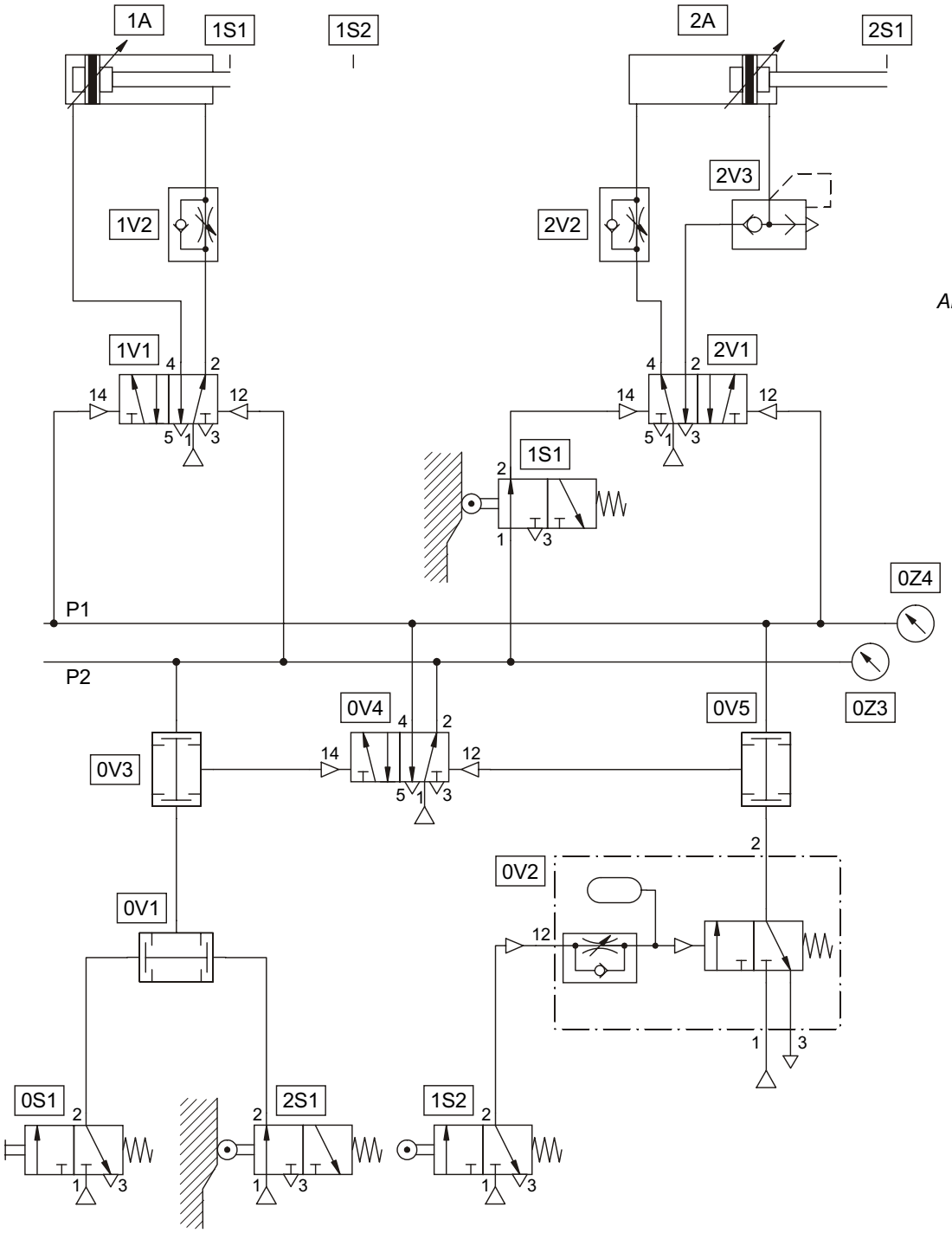

Fig. 16/6:
Alternative circuit B
Circuit design

Solution 16

Fig. 16/7:
Alternative circuit C
Circuit diagram

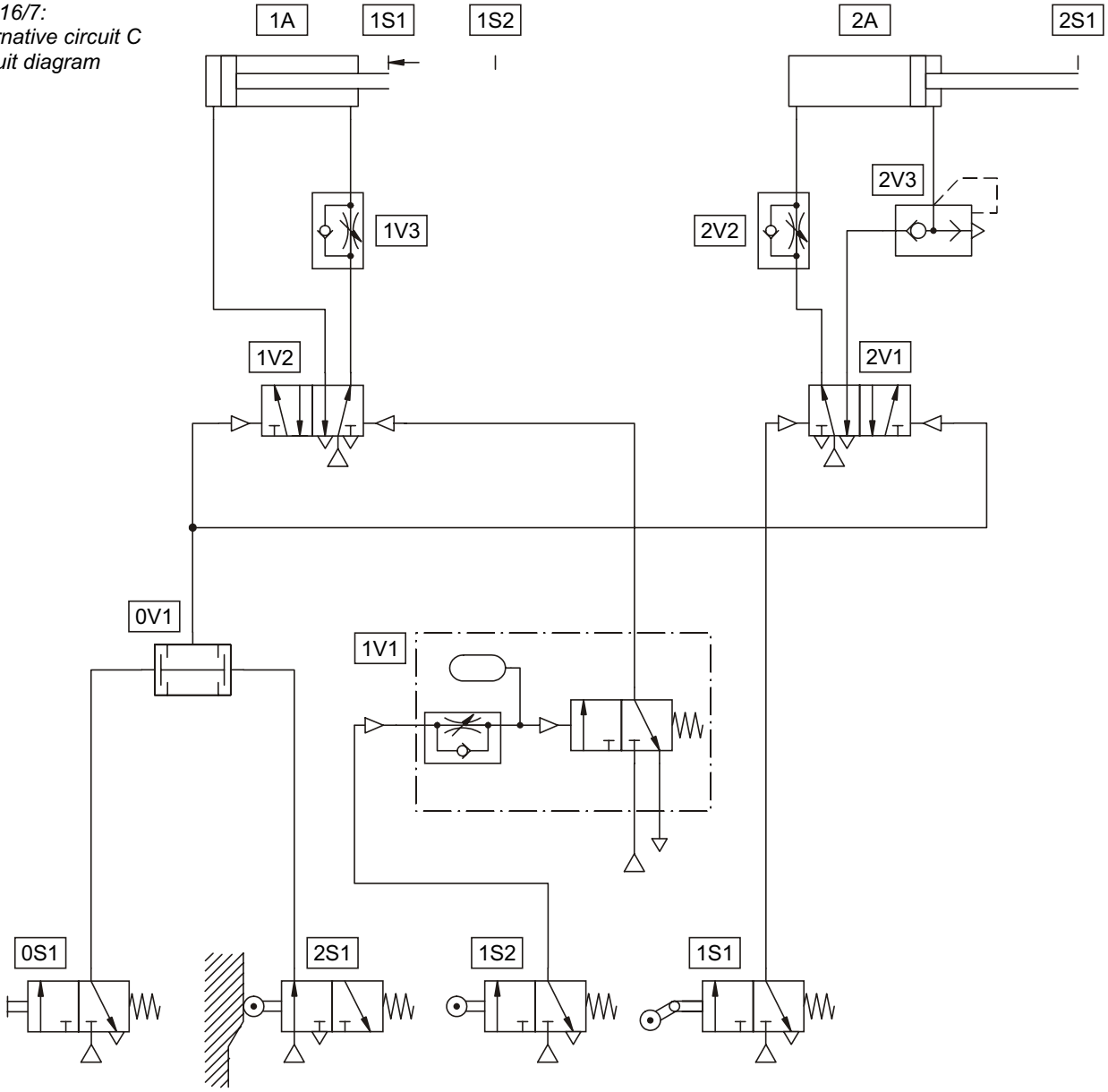

Fig. 16/8:
Alternative circuit D
Circuit diagram

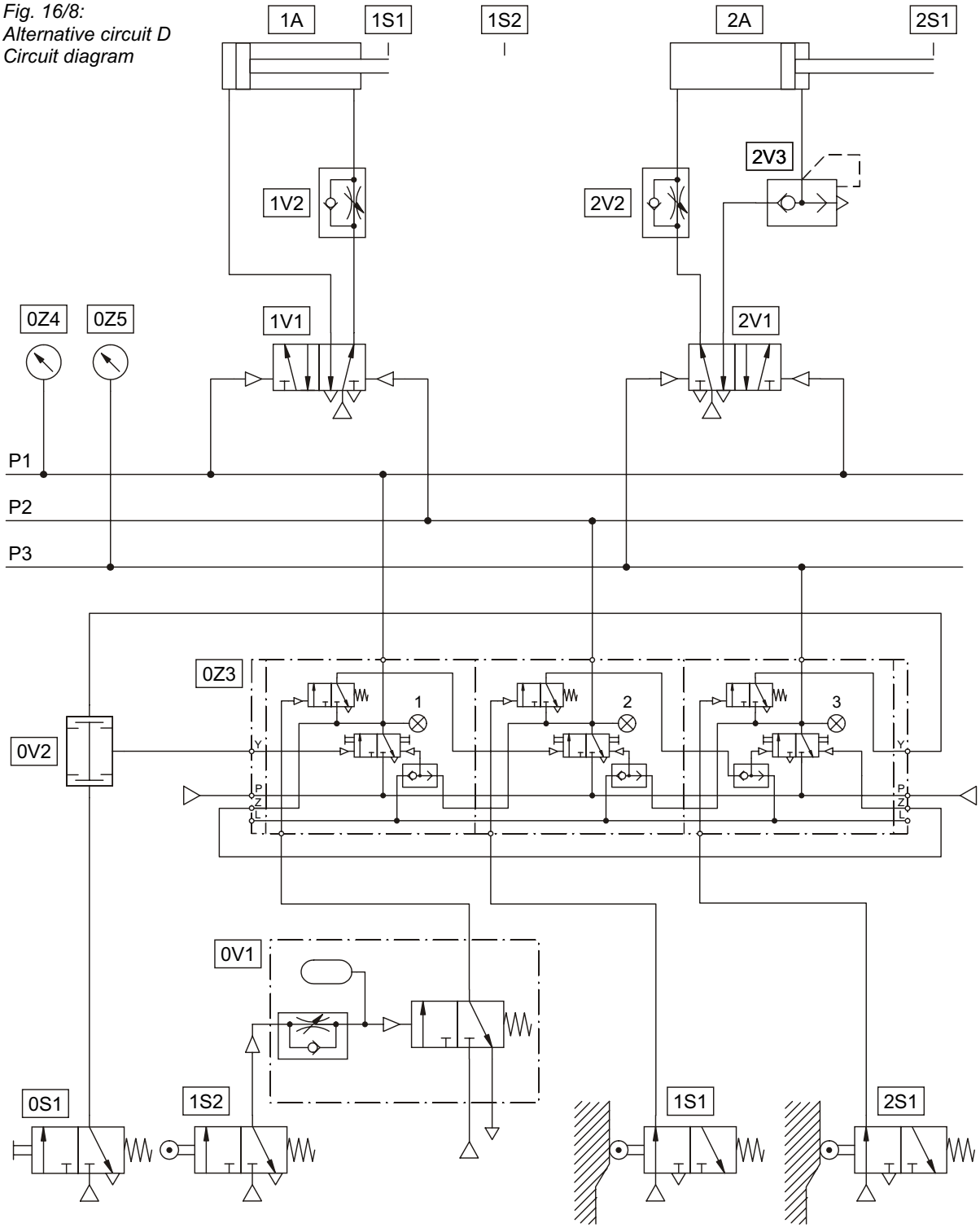

Note regarding this solution

The Festo sequencer consists of at least three modules. It may be extended by any number of further modules. The Festo Didactic stepper modules of equipment set TP102 consist of four modules. Thus, when assembling the circuit, one step must be bridged (see also circuit design of this alternative circuit).

Fig. 16/9: Components – service unit with on-off valve (0Z1) and manifold (0Z2), are no longer shown.

Fig. 16/9:
Alternative circuit D
Circuit design

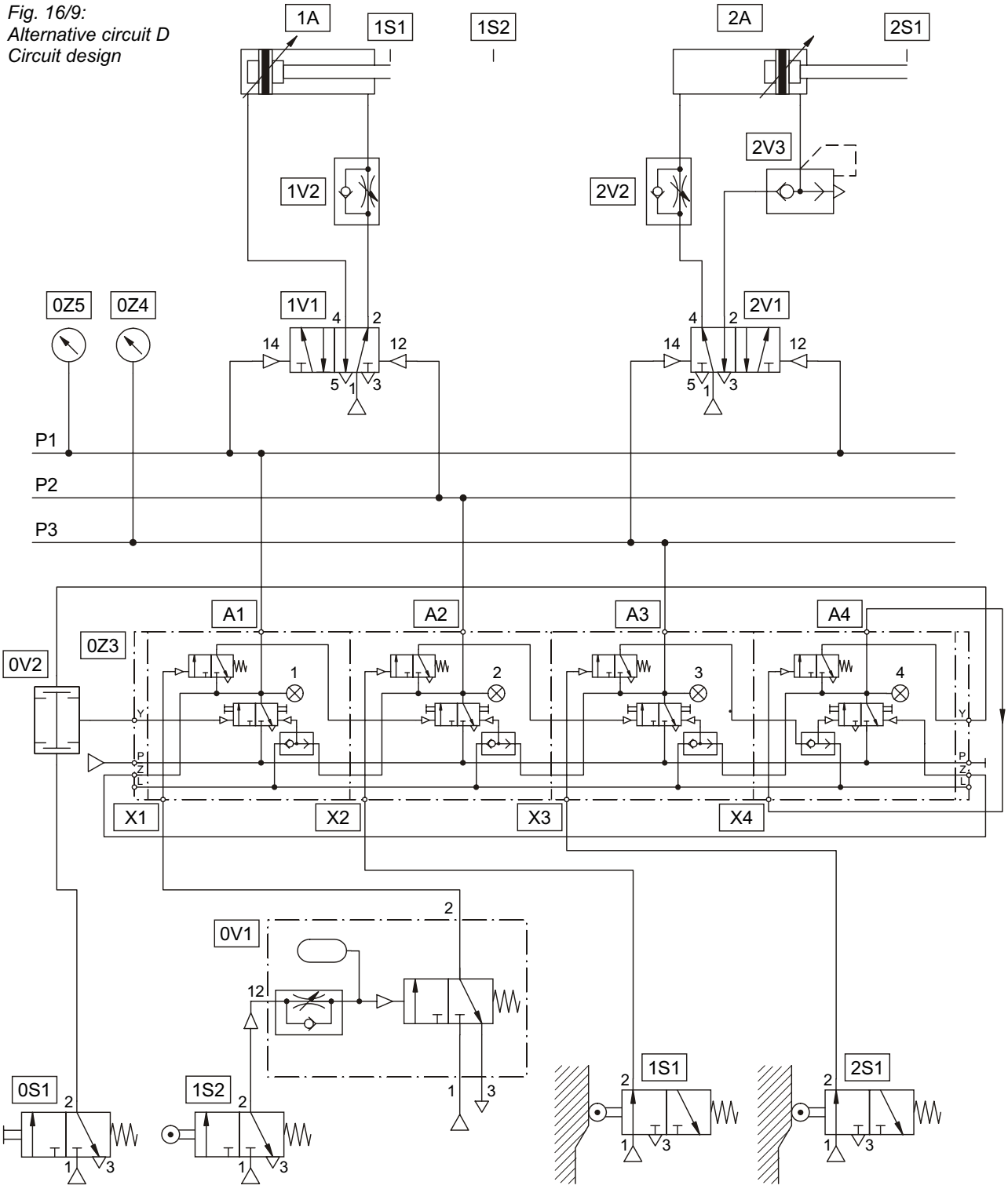

C-86

Solution 16

Partial automation of an internal grinder

Fig. 17/2: Circuit diagram A

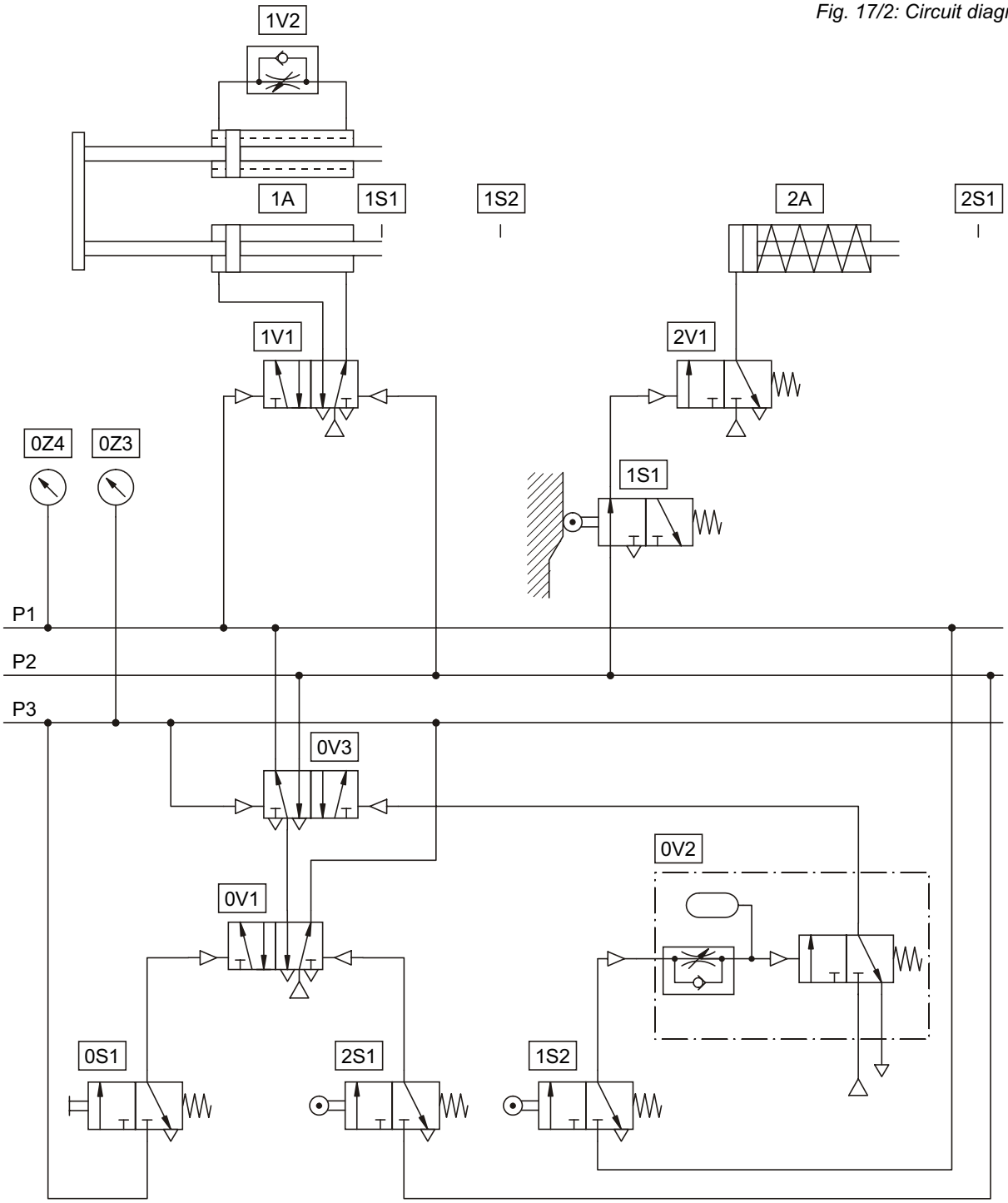

When this circuit is assembled, a double-acting cylinder takes the place of the pneumatic linear feed unit (1A).

Abbreviated notation with division into groups

1A+ | 1A− 2A+ | 2A−

It can be seen from the abbreviated notation, that the preset sequence of movements requires a division into at least two groups. For setting up two lines, one reversing valve is needed.

If a separation into groups is undertaken at the beginning of the cycle, three groups result. For three lines, it is necessary to connect up two reversing valves in series.

Fig. 17/3: Displacement-step diagram

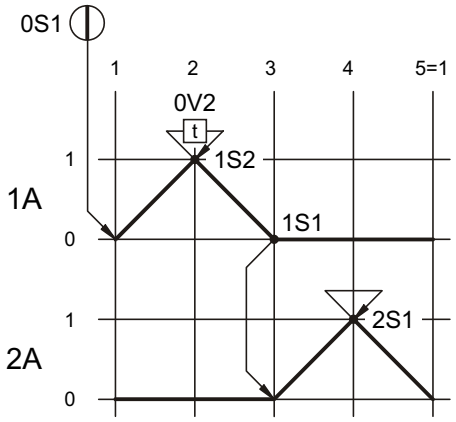

Solution description

Initial position

In the initial position, both cylinders assume the retracted end position. Roller lever valve (1S1) is actuated. The upper reversing valve (0V3) is in the right-hand switching position. Line P3 is pressurised through the left hand switching position assumed by reversing valve (0V1).

Step 1-2

Operation of start push button (0S1) actuates the lower reversing valve (0V1) and provides pressure to line P1 while exhausting line P3. Power valve (1V1) reverses and pneumatic linear feed (1A) advances. In the forward end position, the actuator triggers roller lever valve (1S2). This supplies pressure at the pilot port of time delay valve (0V2). The actuator (1A) remains in the forward end position during t = 2 seconds.

Step 2-3

Switching through of the time delay valve (0V2) causes the upper reversing valve (0V3) to switch and line P2 to be pressurised. Power valve (1V1) is reset. Feed cylinder (1A) goes to its initial position and again actuates roller lever valve (1S1).

Step 3-4

As line P2 is pressurised, actuation of roller lever valve (1S1) causes power valve (2V1) to be switched against spring force. Ejector cylinder (2A) goes forward unthrottled and actuates roller lever valve (2S1).

Step 4-5

Actuation of limit switch (2S1) causes lower reversing valve (0V1) to be switched. This change of status has two effects. Firstly, line P3 is pressurised and the upper reversing valve put into the right-hand switching position, so that both reversing valves (0V1) and (0V3) are back in the initial position. Secondly, line P2 is exhausted. This leads to the resetting of power valve (2V1) and thus, to the retraction of the ejector cylinder (2A).

Fig.17/4: Circuit design

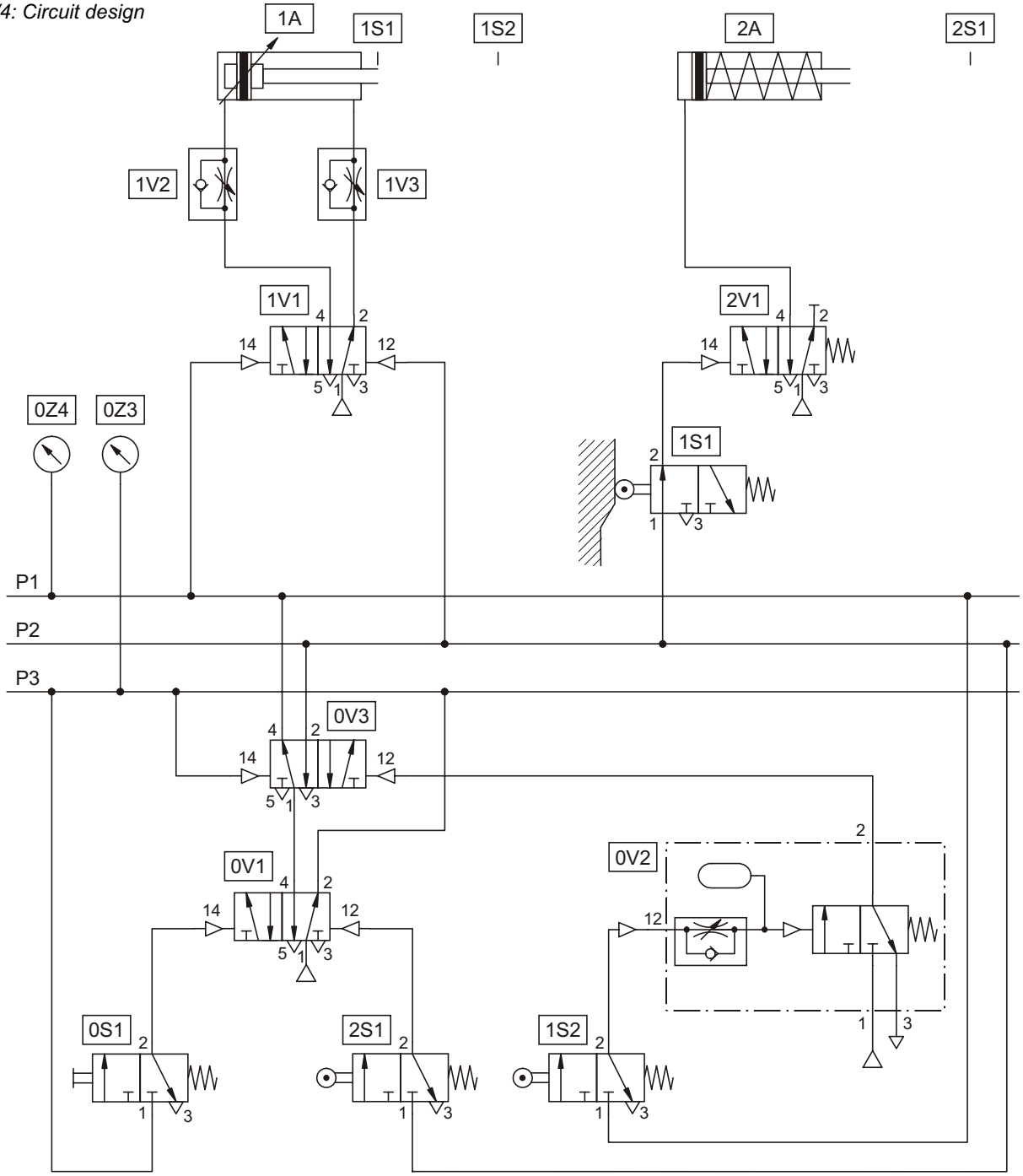

In the set of equipment for the basic level, there are three 5/2-way double pilot valves, (0V1), (0V3) and (1V1). In place of power valve (2V1) with spring return, a fourth 5/2-way double piloted valve may be used. The right-hand pilot port 2V1-12 is then connected to line P3.

Components – service unit with on-off valve (0Z1) and manifold (0Z2), are no longer shown.

Components list

Components	*Description*
0S1	3/2-way valve with push-button, normally closed
0V1	5/2-way double pilot valve
0V2	Time delay valve, normally closed
0V3	5/2-way double pilot valve
0Z1	Service unit with on-off valve
0Z2	Manifold
0Z3	Pressure gauge
0Z4	Pressure gauge
1A	Double-acting cylinder
1S1	3/2-way roller lever valve, normally closed
1S2	3/2-way roller lever valve, normally closed
1V1	5/2-way double pilot valve
1V2	One-way flow control valve
1V3	One-way flow control valve
2A	Single-acting cylinder
2S1	3/2-way roller lever valve, normally closed
2V1	5/2-way single pilot valve

Follow up

- Construct alternative circuits B and C. Find out the advantages and disadvantages of the various alternatives.

Fig. 17/5:
Alternative circuit B
Circuit diagram

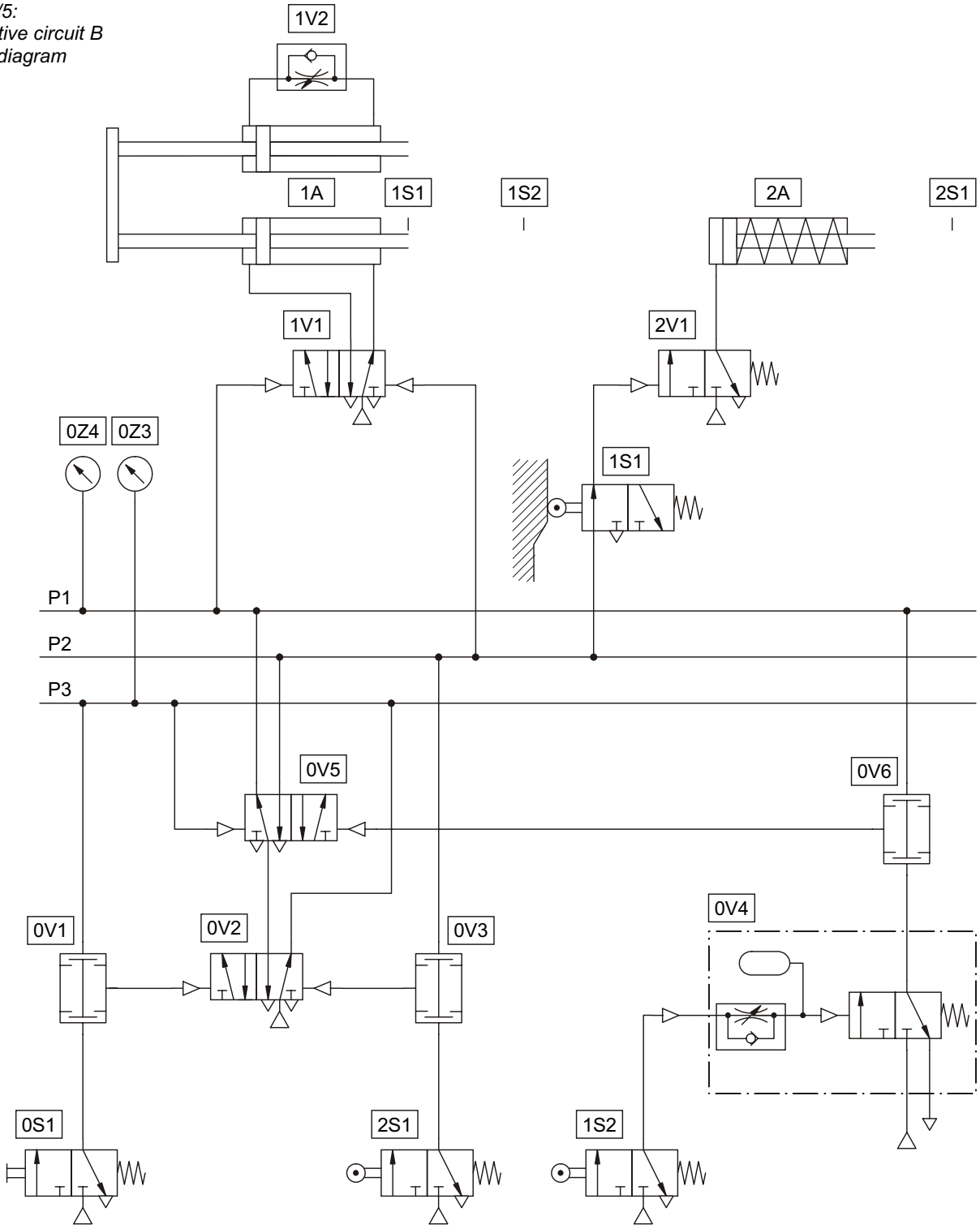

Fig. 17/6:
Alternative circuit C
Circuit design

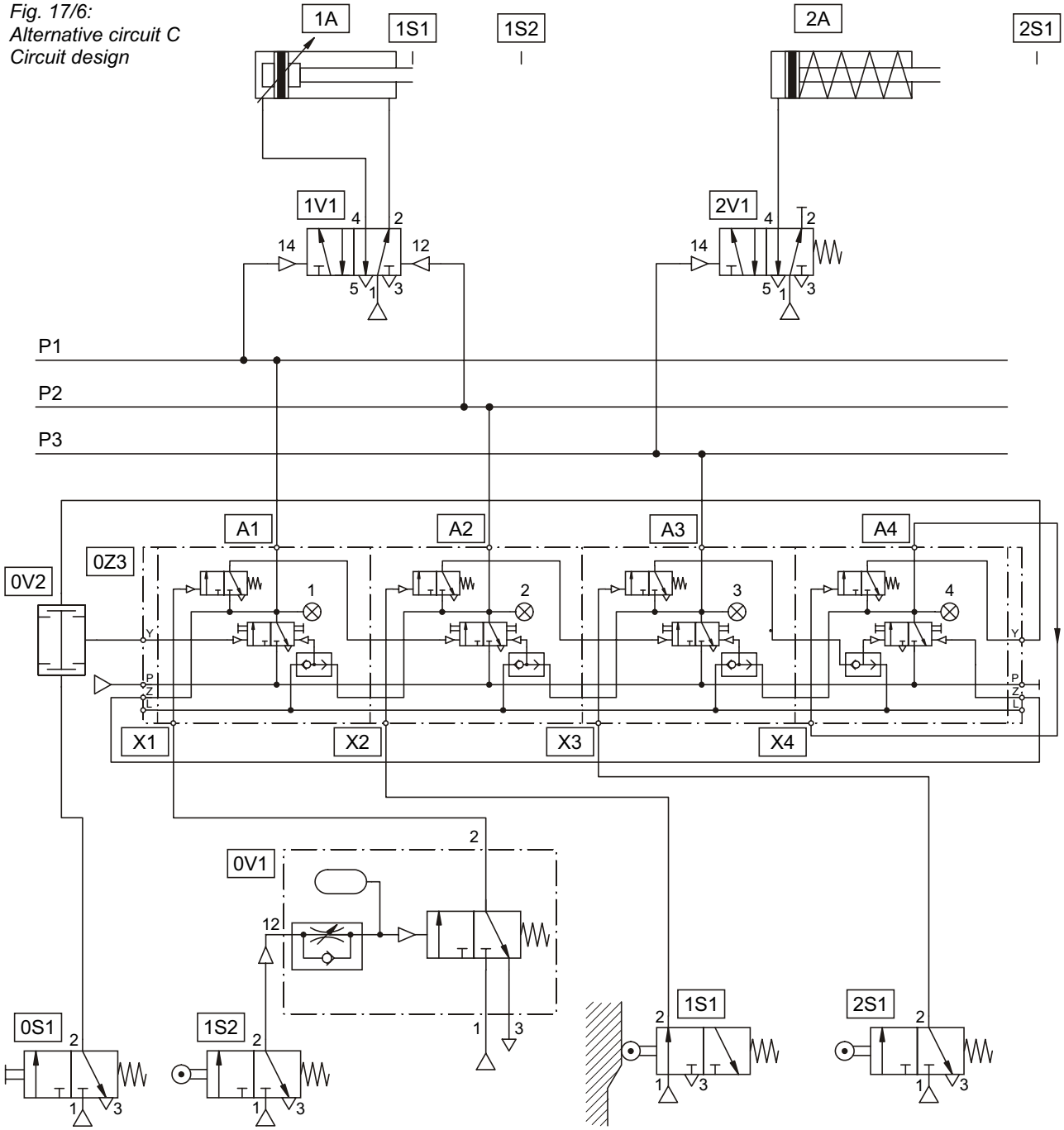

Components – service unit with on-off valve (0Z1) and manifold (0Z2), are no longer shown..

Drilling machine with four spindles

Fig. 18/2: Circuit diagram A

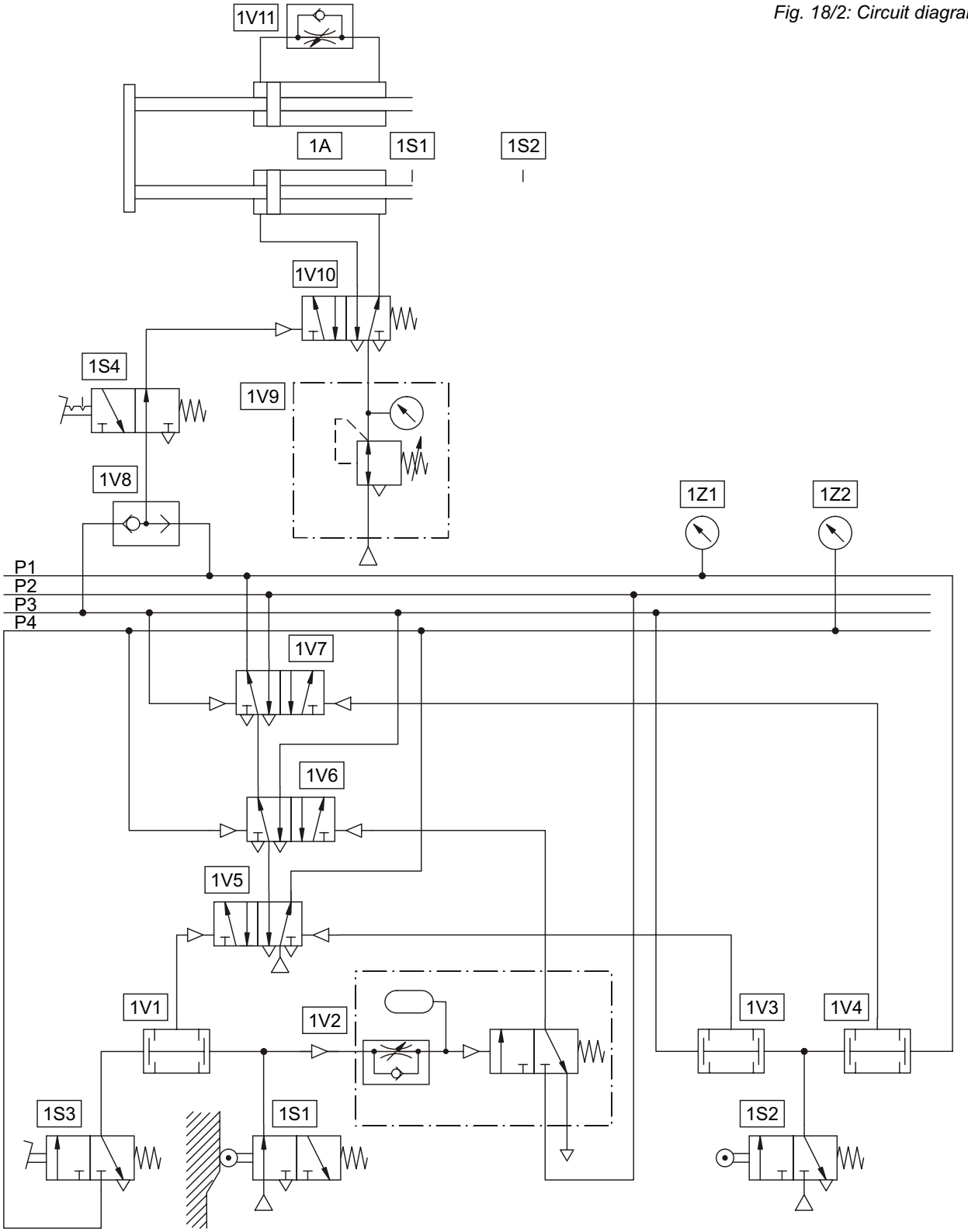

When this circuit is assembled, the "foot-actuated" 3/2-way valves (1S1) and (1S4) are replaced by valves with push button or selector switch

- *(1S1) 3/2-way valve, by push button*
- *(1S4) 5/2-way valve, by selector switch*

The feed unit (1A) is replaced by a double-acting cylinder.

Abbreviated notation with division into groups

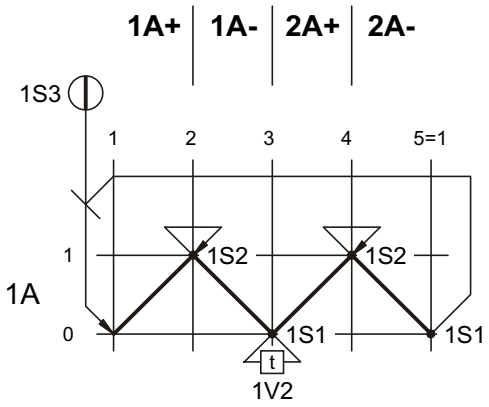

Fig. 18/3: Displacement-step diagram

Solution description

Initial position

In the initial position, the cylinder (1A) assumes the retracted end position. The final control valve (1V10) is located in the left switching position and supplies air to the piston rod chamber. Line P4 is pressurised; the other three lines are exhausted. The upper reversing valve (1V7) and the central reversing valve (1V6) are located in the right-hand switching position. The lower reversing valve (1V5) assumes the left-hand switching position. The roller lever valve (1S1) is actuated.

Step 1-2

The lower reversing valve (1V5) is actuated by depressing the start valve by pedal (1S3). Line P4 exhausts and line P1 is supplied with air. The final control valve (1V10) is reversed via the shuttle valve (1V8) and the 3/2-way valve (1S4). The cylinder extends with flow control. The trip cam actuates the roller lever valve (1S2) in the forward end position.

Step 2-3

The upper reversing valve (1V7) is actuated via the dual-pressure valve (1V4) and by actuating the roller lever valve (1S2). Line P1 is exhausted. Line P2 is supplied with air and the time delay valve (1V2) is pressurised at the supply port with a one-signal. Exhausting line P1 reverses the final control valve (1V10); the cylinder retracts. In the retracted end position, the trip cam re-actuates the roller lever valve (1S1). The control port of the time delay valve (1V2) is now supplied with air by renewed actuation of the roller lever valve. The pneumatic reservoir is filled via the restrictor. The cylinder is held in the retracted end position for t = 1.5 seconds.

Step 3-4

Time delay valve (1V2) switches through at a reservoir pressure p = 3 bar (= 300 kPa), and the central reversing valve (1V6) is thus transferred into the left switching position. Line P2 is exhausted, and line P3 is supplied with air. This leads initially to the upper reversing valve (1V7) being reset to the initial start position. Secondly, the dual-pressure valve (1V3) is supplied with pressure on one side. Thirdly, the final control valve (1V10) is reversed once again and the cylinder extends a second time. The trip cam re-actuates the roller lever valve (1S2) in the forward end position.

Step 4-5

The re-actuation of the roller lever valve (1S2) switches through the dual-pressure valve (1V3) and actuates the lower reversing valve (1V5). The central reversing valve (1V6) is also reset and, by exhausting line P3, the final control valve (1V10) is exhausted on the control side causing the drilling spindles to retract a second time. The roller lever valve (1S1) is actuated a final time in the retracted end position. The three reversing valves are once again in the initial position, i. e. the final line is supplied with air. The other lines are exhausted.

3/2-way valve (1S4) with flow in the normal position

If more time is required to move the spacer than was foreseen, the advance of the cylinder can be prevented through actuation of valve (1S4). Any movement which has been initiated is interrupted and the cylinder travels to the retracted end position. If the detent of the 3/2-way normally open valve (1S4) is unlatched, the motion sequence proceeds as normal.

Solution 18

Fig. 18/4: Circuit design

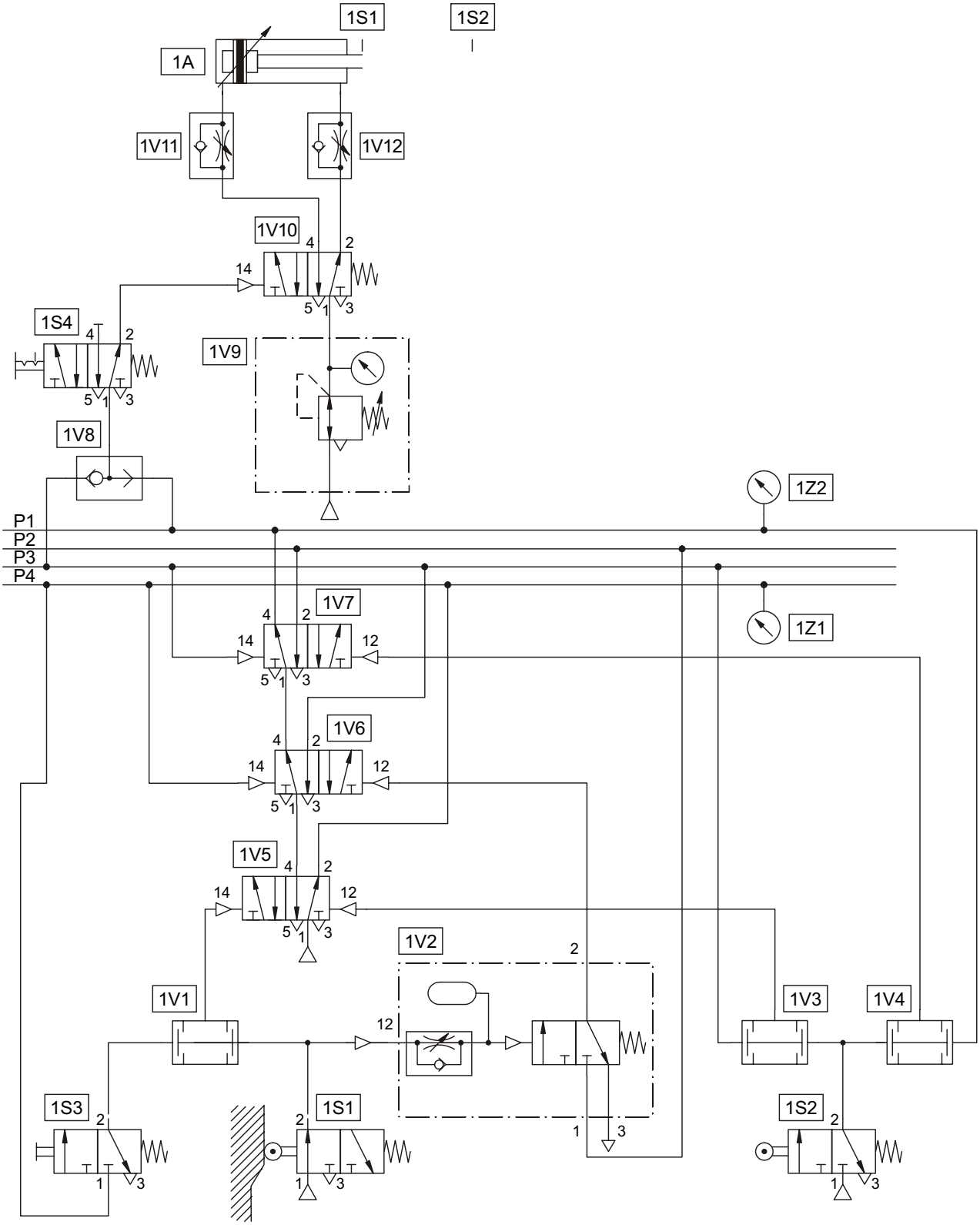

The components – service unit with on-off valve (0Z1), and manifold (0Z2), are no longer shown.

Components list

Components	*Description*
0Z1	Service unit with on-off valve
0Z2	Manifold
1A	Double-acting cylinder
1S1	3/2-way roller lever valve, normally closed
1S2	3/2-way roller lever valve, normally closed
1S3	3/2-way valve with push button, normally closed
1S4	5/2-way valve with selector switch
1V1	Dual-pressure valve
1V2	Time delay valve, normally closed
1V3	Dual-pressure valve
1V4	Dual-pressure valve
1V5	5/2-way double pilot valve
1V6	5/2-way double pilot valve
1V7	5/2-way double pilot valve
1V8	Shuttle valve
1V9	Pressure regulator with pressure gauge
1V10	5/2-way single pilot valve
1V11	One-way flow control valve
1V12	One-way flow control valve
1Z1	Pressure gauge
1Z2	Pressure gauge

Follow up

- Construct alternative circuit B. What advantages are afforded by circuit B?

Fig. 18/5: The components – service unit with on-off valve (0Z1), and manifold (0Z2), are no longer shown.

Solution 18

Fig. 18/5:
Alternative circuit B
Circuit design

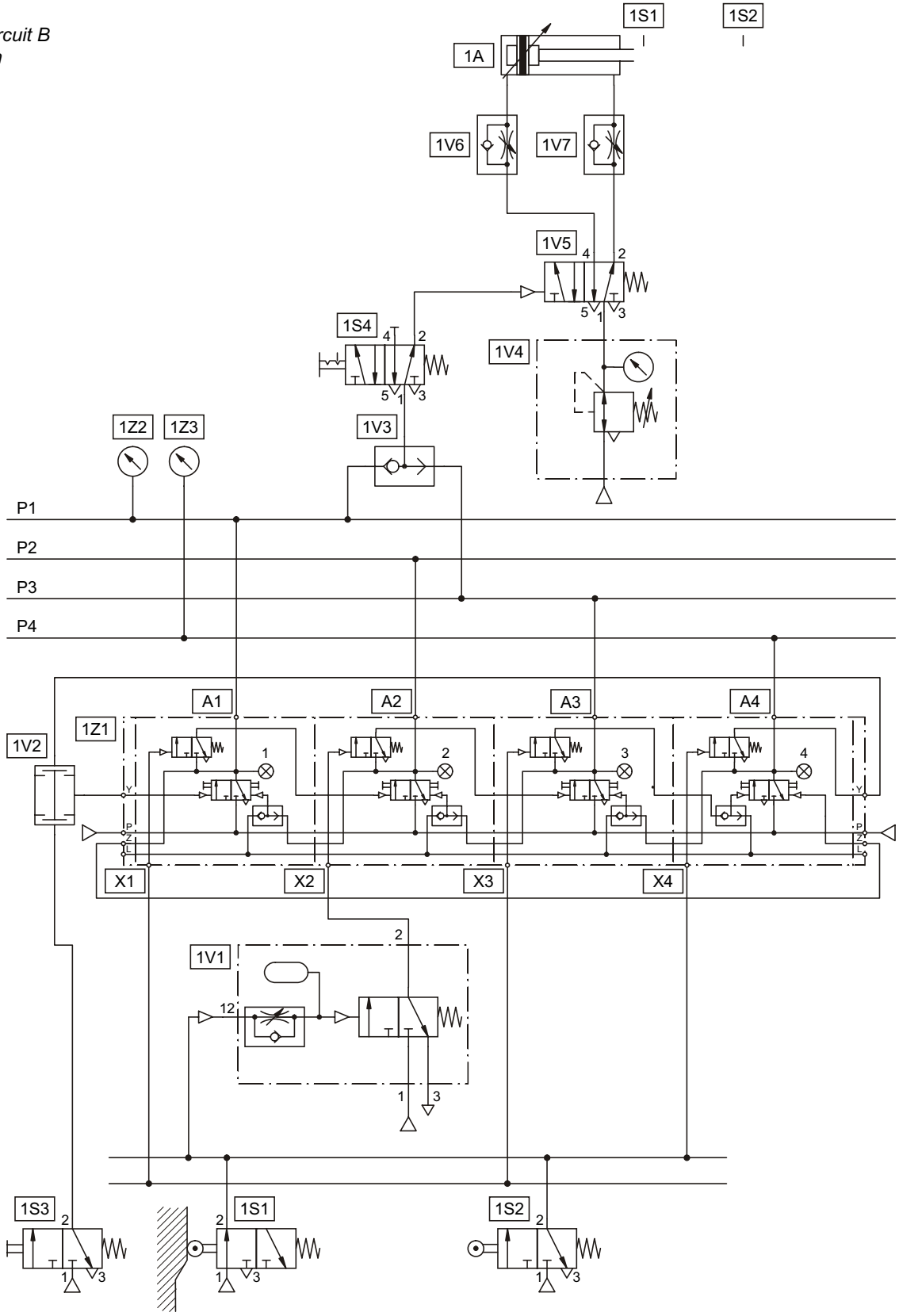

Drilling machine with gravity feed magazine

Fig. 19/3: Circuit diagram

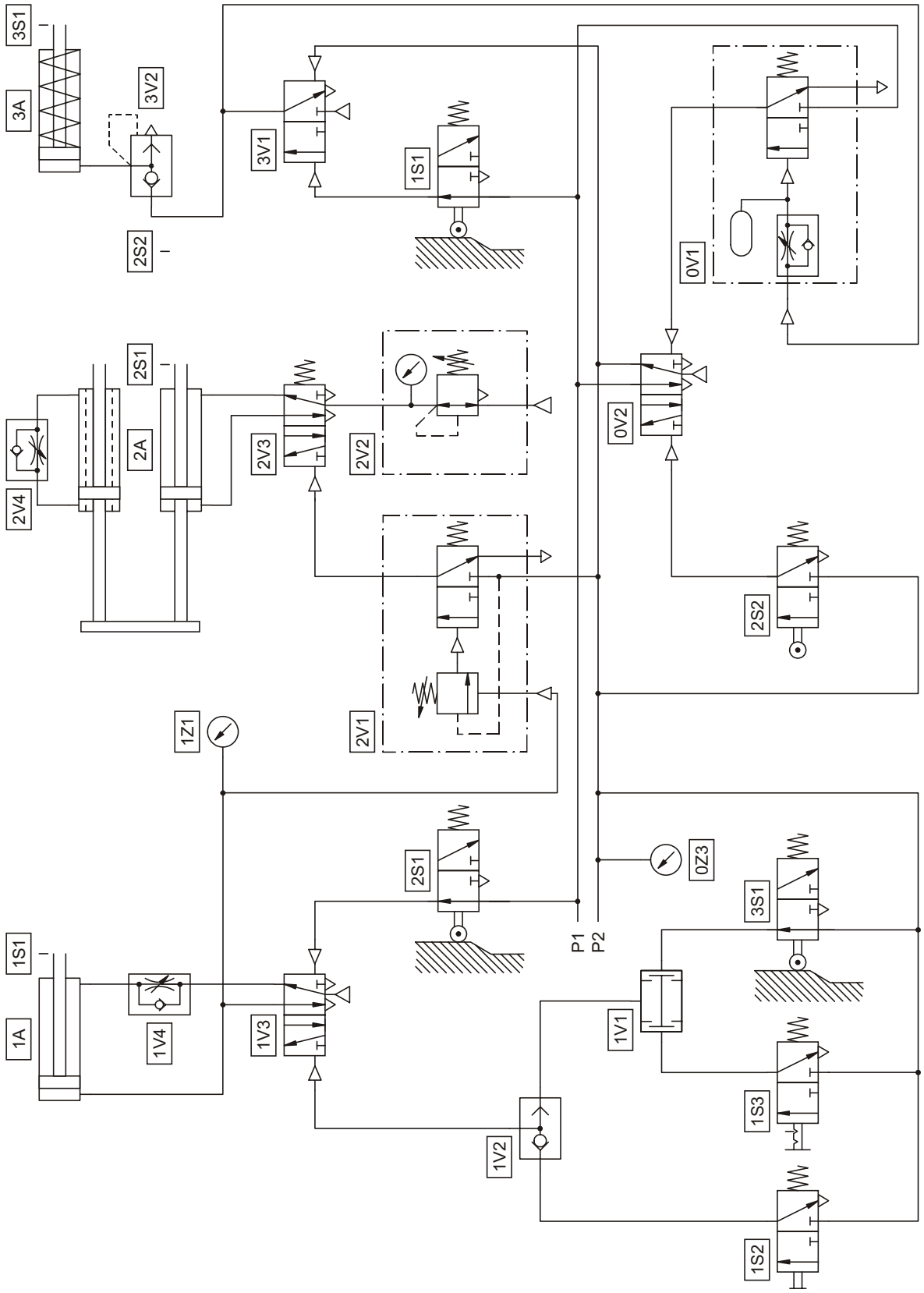

Abbreviated notation with division into groups

1A+ 2A+ | 2A− 1A− 3A+ | 3A−

From the abbreviated notation, it can be seen that the preset motion sequence needs to be divided into a least two groups (minimum division). A reversing valve is necessary for the formation of two lines.

However, this circuit is not very reliable. To achieve a greater degree of reliability, it is necessary either to bring into use components from a second basic level equipment set (TP101) or else to use components from the advanced level (TP102). Please also note alternative solution B.

Fig. 19/4: Displacement-step diagram

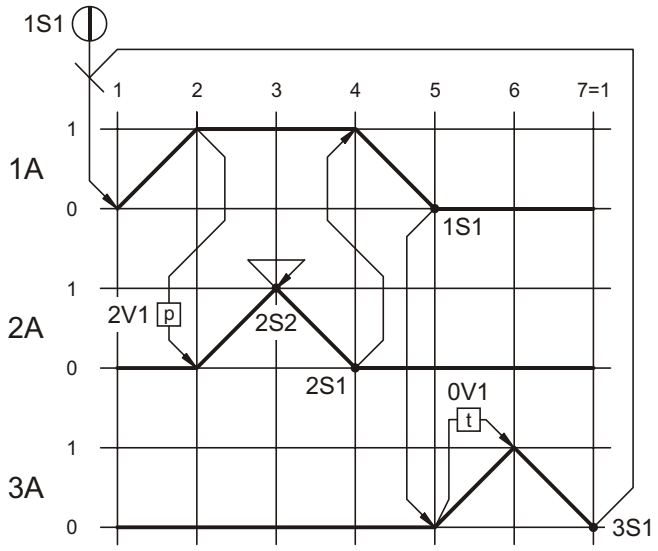

Solution description

Initial position

In the initial position, all three cylinders assume the retracted end position. The clamping cylinder (1A) actuates roller lever valve 1S1). Roller lever valve (2S1) is depressed by feed cylinder (2A). Line P1 is exhausted. Line P2 is supplied with air as reversing valve (0V2) assumes the left-hand switching position.

Step 1-2

Actuation of the start button (1S2) causes the final control element (1V3) to reverse. Clamping cylinder (1A) with exhaust air throttled (1V4), pushes the end piece out of the magazine and under the drilling spindle and holds it in a clamped position against the fixed stop. The pressure continues to rise in the clamping cylinder (1A). When a pressure of p = 4 bar (= 400 kPa) has been reached in the cylinder, the pressure sequence valve (2V1) switches.

Step 2-3

With the switching through of pressure sequence valve (2V1), also supplied with air from line P2, final control valve (2V3) is reversed against the spring. Feed cylinder (2A) extends with flow control (2V4). Roller lever valve (2S2) is actuated in the forward end position.

Step 3-4

Once the forward end position has been reached, the workpiece cylinder (2A) returns to its initial start position. The return stroke is initiated by the actuation of the roller lever valve (2S2), which causes the reversing valve (0V2) to be reversed. Line P1 is supplied with air. Line P2 is exhausted and the final control component (2V3) returns independently. Feed cylinder (2A) actuates roller lever valve (2S1) in the retracted end position.

Step 4-5

When the roller lever valve (2S1) switches through, the final control valve (1V3) reverses, as line P1 is now exhausted. The clamping cylinder (1A) returns without flow control. In the retracted end position, the cylinder trip cam depresses the lever of the roller lever valve (1S1).

Step 5-6

Final control element (3V1) is reversed by actuating roller lever valve (1S1). Ejecting cylinder (3A) pushes the finished end piece out of the machine. At the same time, the pneumatic reservoir of the time delay valve (0V1) is filled via the restrictor. The time delay valve (0V1) is actuated at a control pressure of p = 3 bar (= 300 kPa).

Step 6-7

When time delay valve (0V1) has been switched through, the ejector cylinder (3A) returns quickly. The fast movement is achieved by the use of a quick exhaust valve (3V2). In the retracted end position, ejecting cylinder (3A) actuates roller lever valve (3S1). When the 5/2-way valve with selector switch (1S3) has been switched, a new cycle is initiated.

Continuous cycle / single cycle

When the valve with selector switch (1S3) is in the position shown, a start signal with the push button (1S2) initiates a single cycle. A continuous cycle is also initiated by reversing the 5/2-way valve with selector switch (1S3). If the detented valve is reset, the controller remains in the initial position at the end of the cycle.

Fig. 19/5: Circuit design A

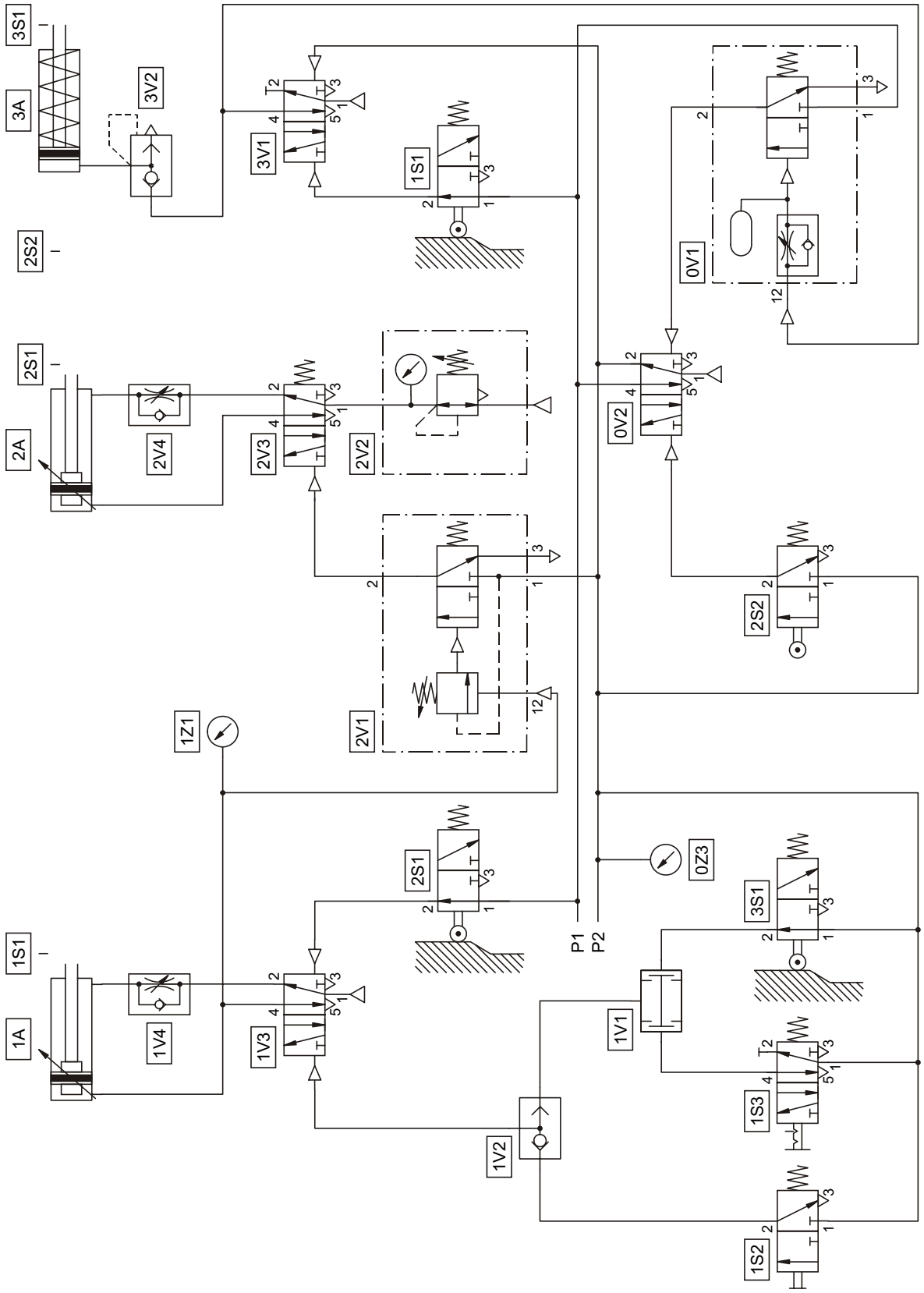

Components list

Components	*Description*
0V1	Time delay valve, normally closed
0V2	5/2-way double pilot valve
0Z1	Service unit with on-off valve
0Z2	Manifold
0Z3	Pressure gauge
1A	Double-acting cylinder
1S1	3/2-way roller lever valve, normally closed
1S2	3/2-way valve with push-button, normally closed
1S3	5/2-way valve with selector switch
1V1	Dual-pressure valve
1V2	Shuttle valve
1V3	5/2-way double pilot valve
1V4	One-way flow control valve
1Z1	Pressure gauge
2A	Double-acting cylinder
2S1	3/2-way roller lever valve, normally closed
2S2	3/2-way roller lever valve, normally closed
2V1	Pressure sequence valve
2V2	Pressure regulator with pressure gauge
2V3	5/2-way single pilot valve
2V4	One-way flow control valve
3A	Single-acting cylinder
3S1	3/2-way roller lever valve, normally closed
3V1	5/2-way double pilot valve
3V2	Quick exhaust valve

Follow up

- Construct alternative circuit B. What advantages are offered by division into three rather than two groups?

Abbreviated notation

With division into groups for alternative circuit B

1A+ 2A+ | 2A− 1A− 3A+ | 3A−

Fig. 19/6:
Alternative circuit B
Circuit design

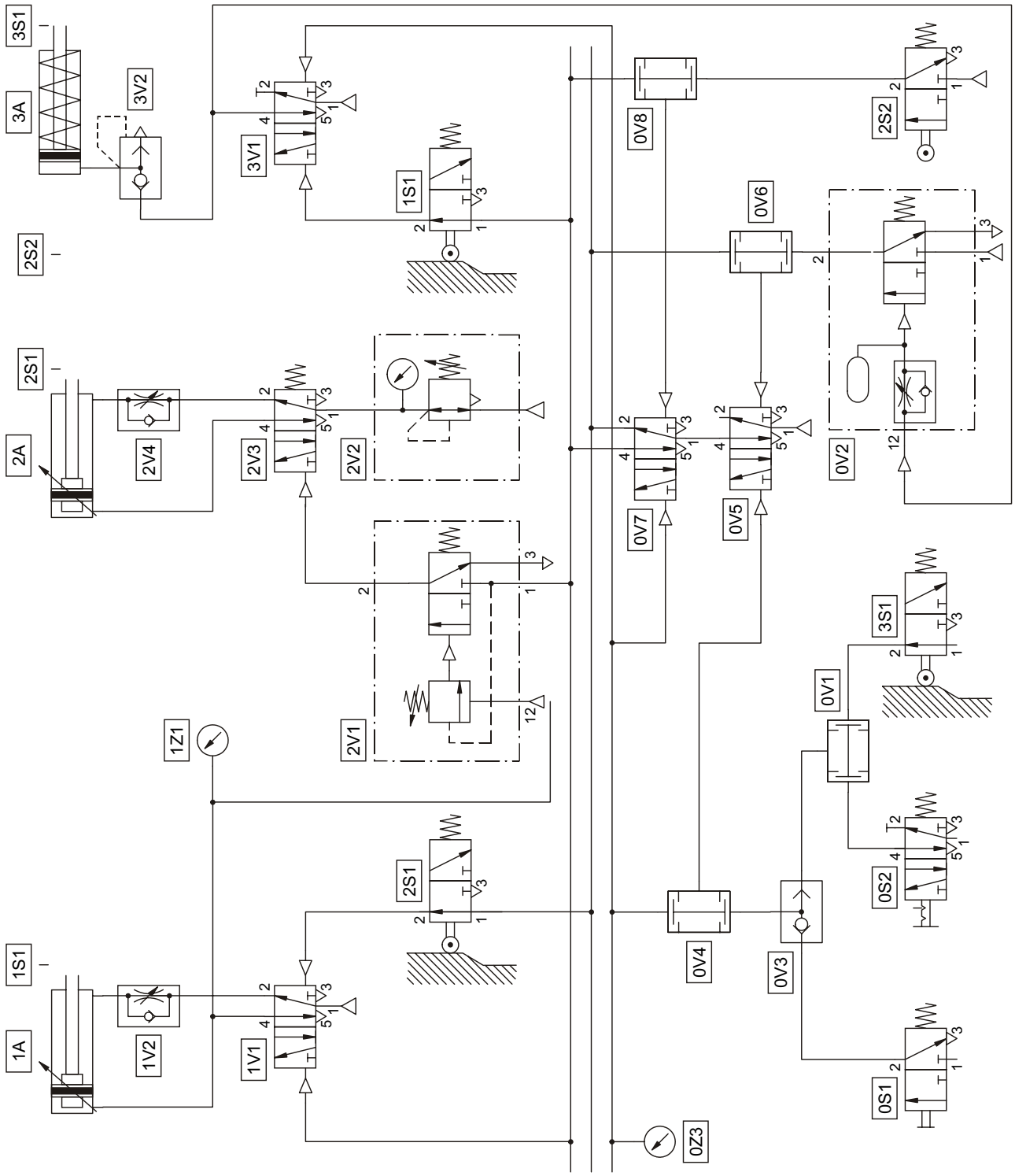

C-108

Solution 19

Pneumatic Counter

Fig. 20/2: Circuit diagram

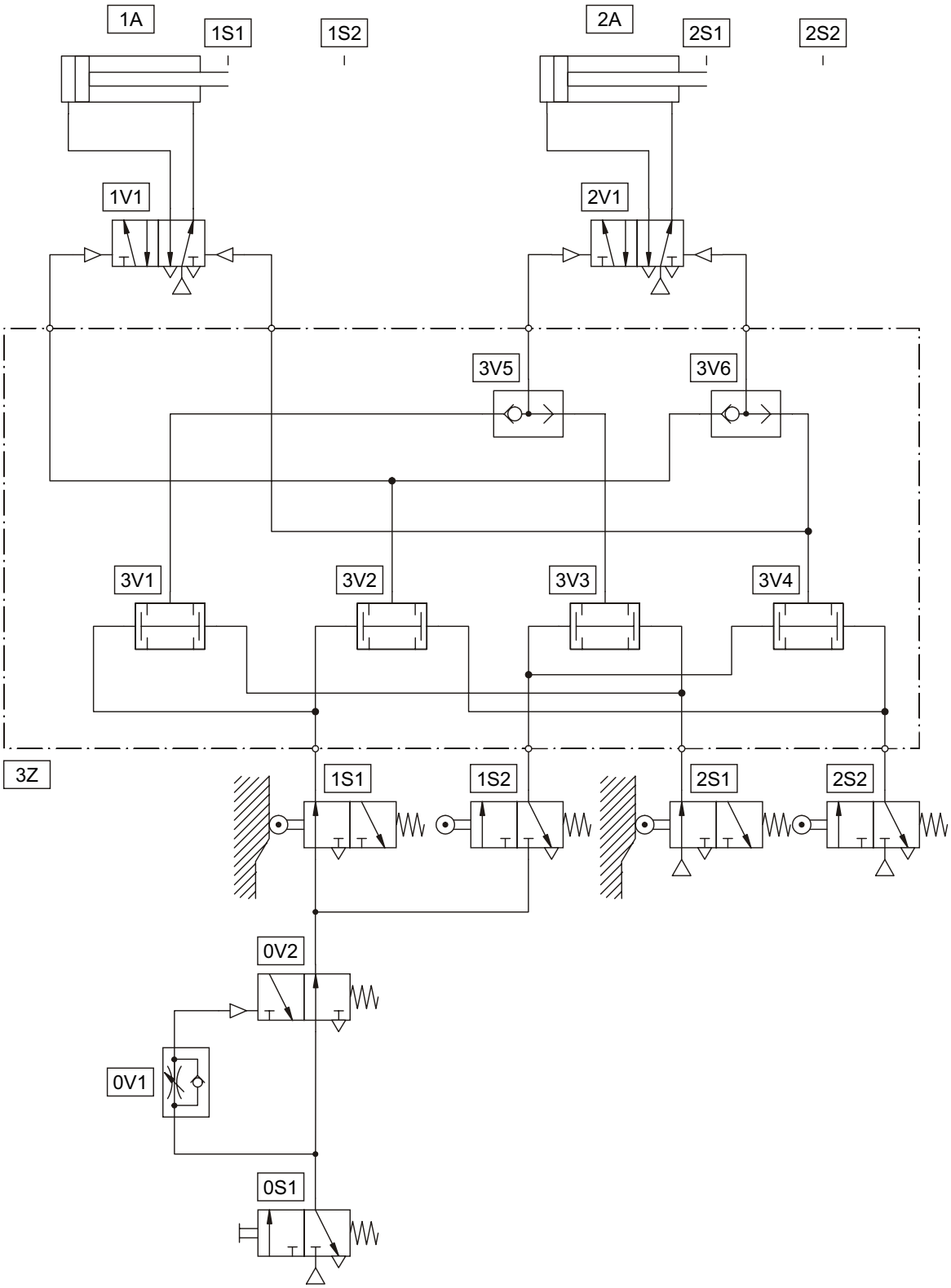

Abbreviated notation

2A+ 1A+ 2A- 2A+ 1A- 2A-

Fig. 20/3: Displacement-step diagram

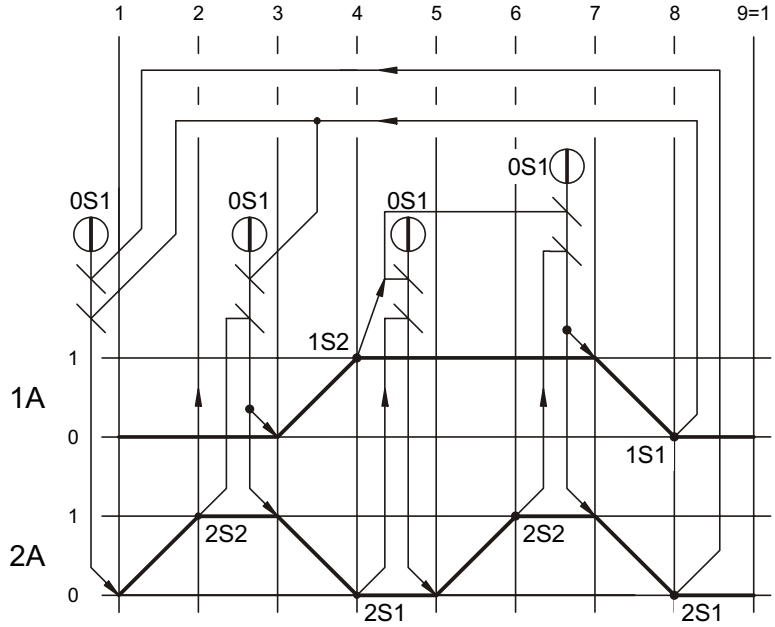

Solution description

When a counting process has been completed, i. e the cylinders have carried out their movements, one roller lever valve is always actuated per cylinder. The signal to continue counting (counting signal) need, therefore, only be given to roller lever valves (1S1) and (1S2).

Cylinder (1A) represents the left figure (2^1) in the binary system, whilst a counting cyle (1,2,3,0) reverses the final control element (1V) twice. The dual-pressure valve (3V2) signals to the final control valve (1V) to extend. The dual-pressure valve (3V4) signals in the same way to the same valve to retract.

Cylinder (2A) represents the right-hand figure (2^0) in the binary system whilst a counting cycle switches the final control element (2V) four times. The two shuttle valves (3V5) and (3V6) process together these four signals for the final control valve (2V).

Dual-pressure valve (3V1) counts from zero to one.
Dual-pressure valve (3V2) counts from one to two.
Dual-pressure valve (3V3) counts from two to three.
Dual-pressure valve (3V4) counts from three to zero.

Fig. 20/4: Circuit design

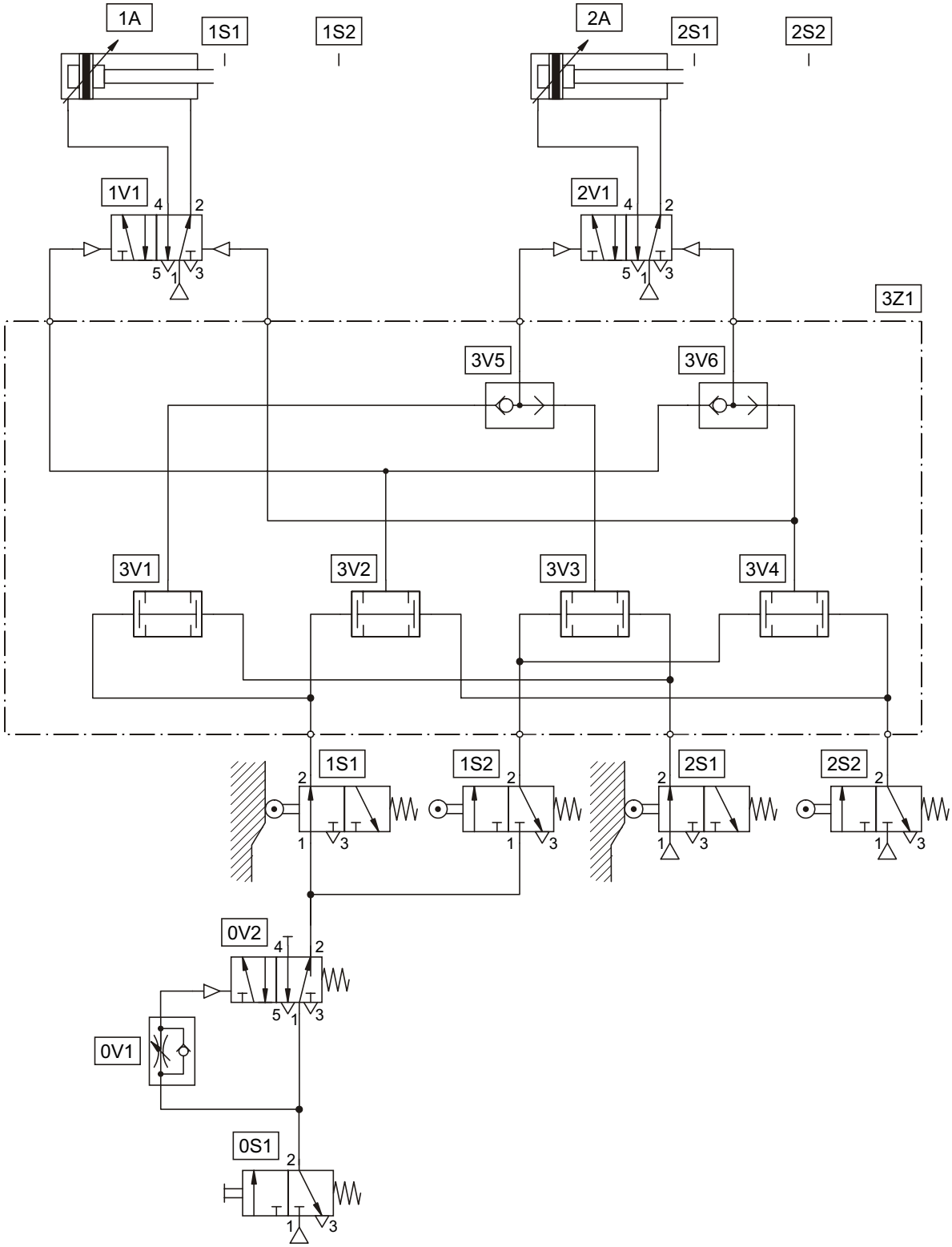

Components list

Components	*Description*
0S1	3/2-way valve with push button, normally closed
0V1	One-way flow control valve
0V2	5/2-way single pilot valve
0Z1	Service unit with on-off valve
0Z2	Manifold
1A	Double-acting cylinder
1S1	3/2-way roller lever valve, normally closed
1S2	3/2-way roller lever valve, normally closed
1V1	5/2-way double pilot valve
2A	Double-acting cylinder
2S1	3/2-way roller lever valve, normally closed
2S2	3/2-way roller lever valve, normally closed
2V1	5/2-way double pilot valve
3V1	Dual pressure valve
3V2	Dual pressure valve
3V3	Dual pressure valve
3V4	Dual pressure valve
3V5	Shuttle valve
3V6	Shuttle valve

Follow up

- Replace the signal input arrangement (0S), (0V1) and (0V2) with a pulse oscillator with the signal frequency f = 1/3 Hz (Hertz), which counts continually. Specifications for the pulse oscillator:

  - Pneumatic self-latching with “dominant off behaviour”

  - Time delay valve

  - Dual pressure and shuttle valves

Fig. 20/5: The cylinder (2A) carries out a double movement for each cycle. In the case of the cascade control, 3 reversing valves are necessary (see exercise 18).

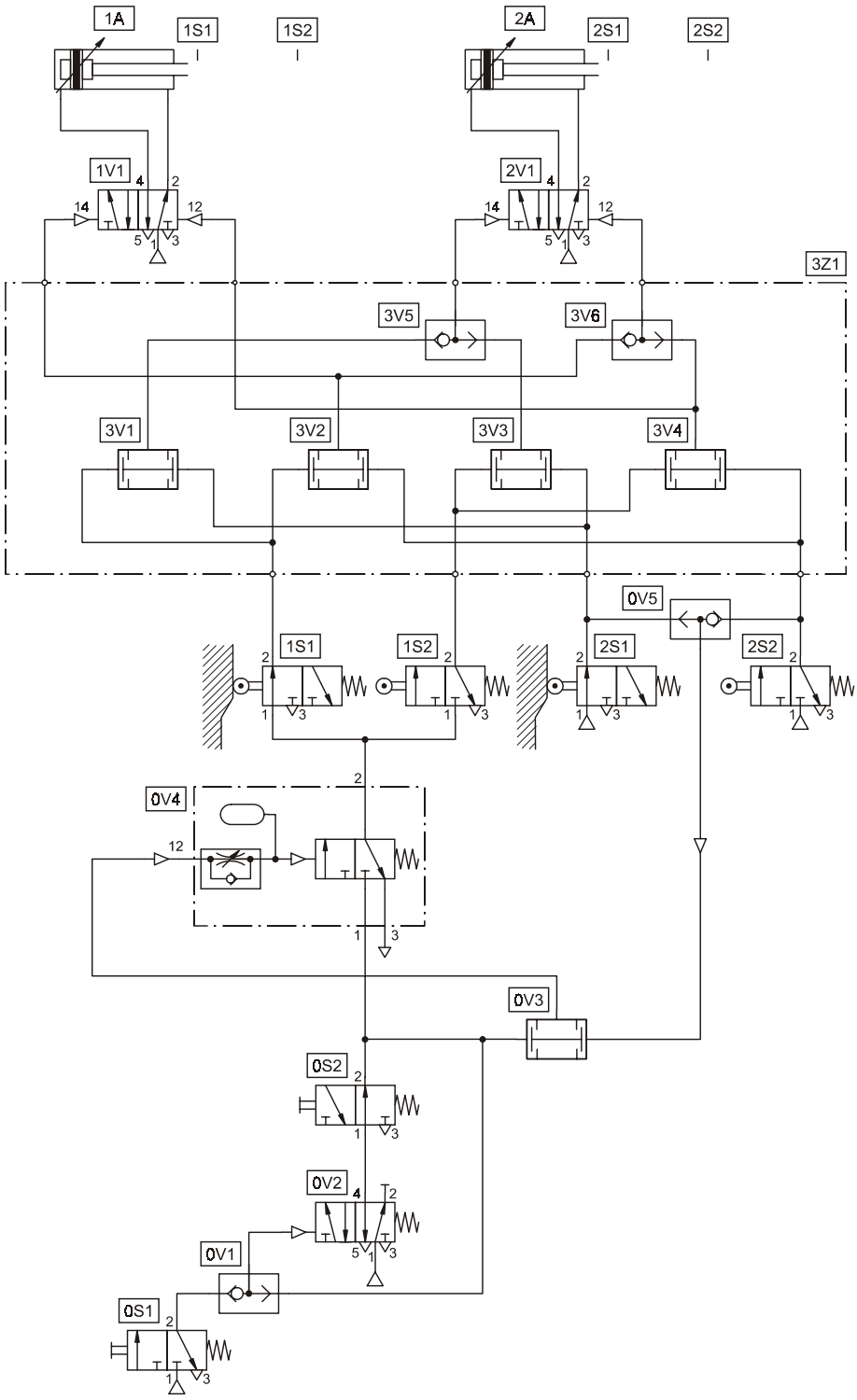

Fig. 20/5: Follow up Circuit design solution

C-114

Solution 20